Hard Material Solutions

2023 **EN**

Solutions for stone working

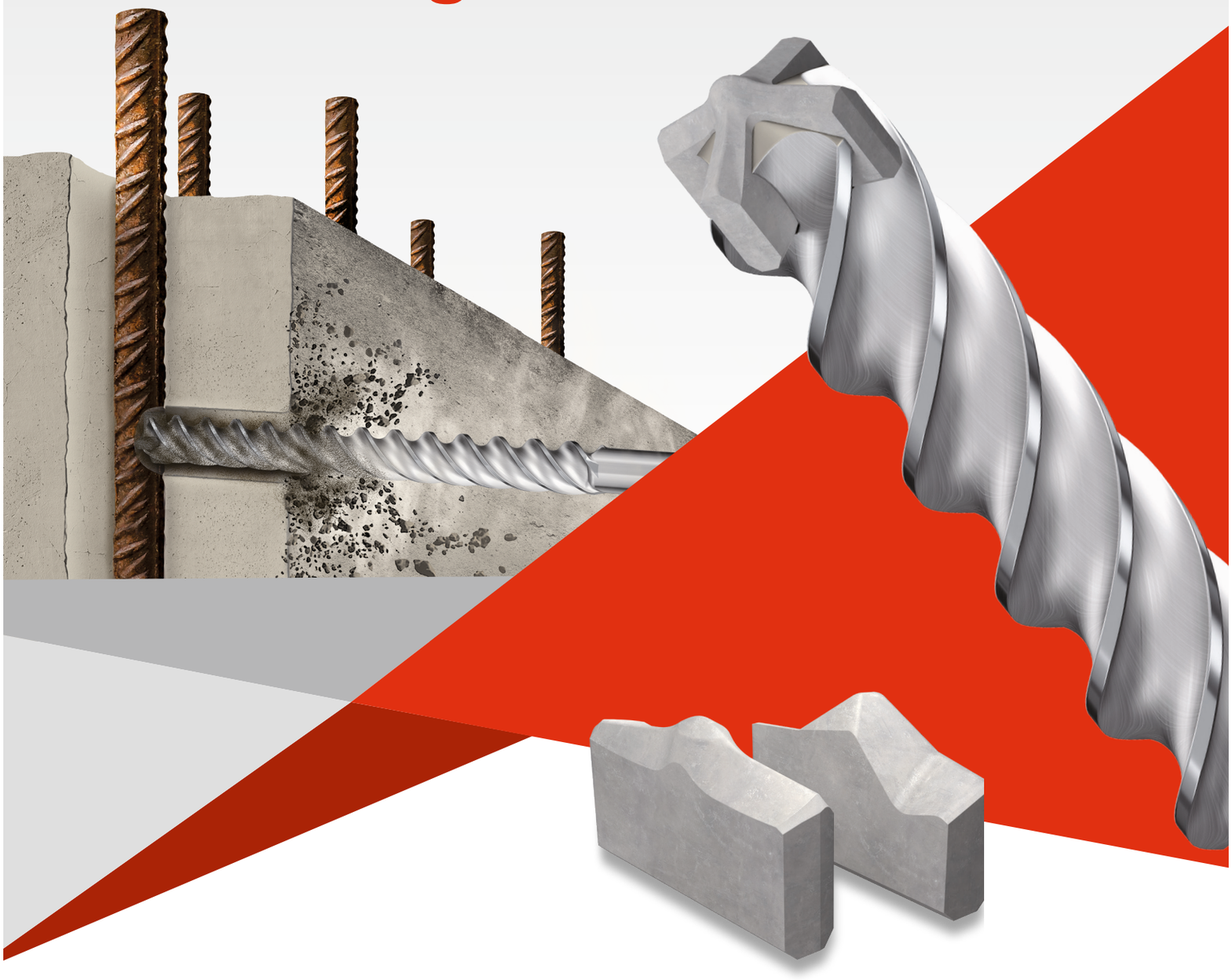

CERATIZIT is a high-technology engineering group specialised in cutting tools and hard material solutions.

Tooling a Sustainable Future

ceratizit.com

MD_SB_Solutions-for-stone-working_#SALL_#AQU_#V1.indd 1 13.04.2023 14:46:02



Because your needs are important to us, we work together with you to find the ideal solution for your application and requirements. **You can rest assured that with us you are not just a customer but a partner.**

Dear valued customer

We would like to present you with our new catalogue for stone working products. It contains all the standard products manufactured by CERATIZIT.

CERATIZIT can offer you even more than our standard products range! Get a competitive head start, and benefit from decades of experience in the development of customised solutions for the machining of concrete, ferro-concrete, stone, masonry and other materials. Thanks to our engineering team, we offer everything tool manufacturers need. Innovation, new developments, high value and quality products and service are our core business.

Because your needs are important to us, we work together with you to find the ideal solution for your application and requirements. You can rest assured that with us you are not just a customer but a partner.

Yours,

the CERATIZIT team



MD_SB_Solutions-for-stone-working_#SALL_#AQU_#V1.indd 3 13.04.2023 14:46:07

Contents

▲ **CERATIZIT Group**	**5**
▲ **Cemented carbide**	**6-10**
Carbide production	**7**
Metal forming – pressing – machining	**8**
Sintering	**9**
Carbide properties	**10**
▲ **Production site**	**11**
▲ **Grades for stone working**	**12-15**
Cemented carbide: a smart composition	**13-14**
Composition and properties	**15**
▲ **Innovation**	**16-19**
Project management in collaboration with our customers	**18-19**
▲ **Hammer drill tips**	**20-35**
Grades	**22**
Applications	**23**
Hammer drill tips	**24-35**
▲ **Masonary drill tips**	**36-57**
Grades	**38**
Applications	**39**
CERATIZIT Style 58000	**40**
Masonry drill tips	**41-57**
▲ **Special tips**	**58-63**
Metal cutting tips	**60-61**
Glass drill tips	**62-63**
▲ **Core drill tips**	**64-69**
Grades	**66**
Core drill tips	**67-69**
▲ **Hard Material Solutions**	**70**
▲ **Index**	**71**

MD_SB_Solutions-for-stone-working_#SALL_#AQU_#V1.indd 4 13.04.2023 14:46:08

CERATIZIT Group

For over 100 years, CERATIZIT has been a pioneer in developing exceptional hard material solutions for machining and wear protection. The private company, with registered offices in Mamer, Luxembourg, develops and produces highly specialised cutting tools, indexable inserts, rods made from hard materials and wear parts.

The CERATIZIT Group is the global market leader in various application segments and successfully develops new carbide and cermet grades, such as for wood and stone working.

Facts & figures

Headquarters

Mamer, **Luxembourg**

30 production sites

30 % of products developed in the last 5 years

2 00 R&D employees

80 countries in which we are active

7 000 employees

25 innovation awards

1 000 patents & utility models

1 00 000 products

€ **1.5** bn turnover

Cemented carbide

Cemented carbides are composite materials consisting of a hard material and a comparatively soft binder metal, like cobalt (Co). The performance characteristics of carbide are determined by hardness, transverse rupture strength and fracture toughness. With regard to their application, important parameters for the optimisation of these characteristics are the cobalt content and the grain size of the metal binder phase. The tungsten carbide grains have an average size of less than 0.2µm up to several micrometres (µm). The cobalt fills the gaps between the carbide grains. When extremely high toughness is required, the cobalt content can amount to as much to 30%, whereas, for maximum wear resistance, the cobalt content is reduced and the grain size decreased to the nanocrystalline range of < 0.2 µm.

CERATIZIT produces far more than 100 different cemented carbide grades particularly for wear parts and cutting tools, thus offering a customised solution for every application.



Carbide production

Carbide production at CERATIZIT started in 1929. Last but not least, thanks to long-standing experience CERATIZIT handles the entire process chain, from the raw material to the dispatching of the finished products to customers. The production process of powder-metallurgical products basically includes the four steps of powder preparation, shaping, sintering and finishing.

APT (ammonium para-tungstate)



Tungsten carbide production

The ammonium para-tungstate (APT) is calcined into tungsten oxide under high temperature. Subsequently the oxide is reduced to tungsten metal in a hydrogen atmosphere. The metal powder is then mixed with carbon and carburised under inert atmosphere at high temperatures. The production parameters are decisive for the WC grain size in the sintered carbide.

Yellow tungsten oxide



Powder preparation

The tungsten carbide is intensely mixed with the binder metal cobalt, nickel or iron, various grain growth inhibitors and special alloys as well as materials, which promote compaction, by wet grinding so that a homogeneous suspension is created. Afterwards, the suspension is dried in a spray tower to produce a granulate with good flow characteristics. This granulate represents the basis for all forming processes.

Blue tungsten oxide



Tungsten



Tungsten carbide

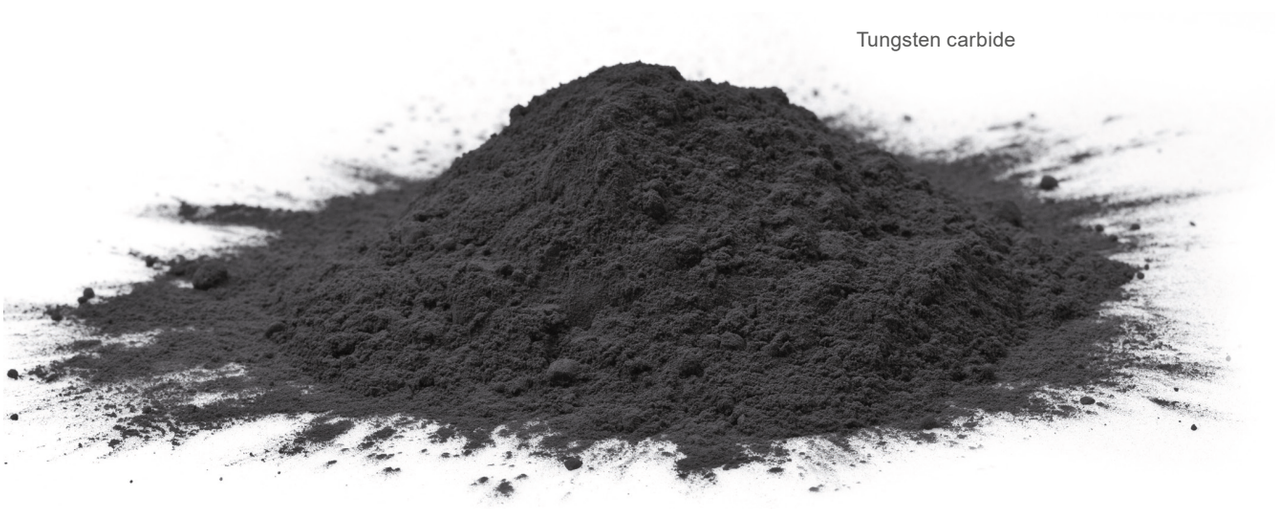

MD_SB_Solutions-for-stone-working_#SALL_#AQU_#V1.indd 7 13.04.2023 14:46:10

Metal forming – pressing – machining

Metal forming

The objective of the forming process is to obtain a near net shape sample. Pressing is normally carried out at room temperature with pressures reaching up to several tons per square centimetre.

There are several ways of pressing blanks:



During isostatic cold pressing the powder is filled into an elastic flexible hose and pressed into a compacted form through high liquid pressure. The powder blocks which are produced in this way can then be processed mechanically. All common machining methods like milling, cutting, drilling or turning may be applied.





In uniaxial pressing the pressing tool consists of a die and an upper and a lower punch. The carbide powder is filled into the die and then compacted to create the so called green carbide, which is ejected from the pressing die.





Extrusion pressing is mainly used to produce rectangular bar or cylindrical rod, with or without axial hole(s). A plasticiser is added to the powder. The resulting paste is pressed through an extrusion nozzle. Before sintering, the plasticiser must be evaporated in special drying furnaces.

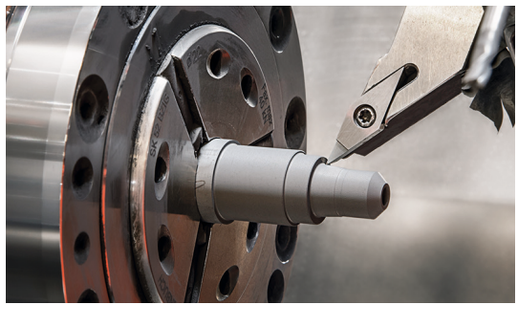



Metal Injection Moulding (MIM) is a process used to produce more complex forms which cannot be produced by direct pressing. The paste preparation is similar to the extrusion process.

MD_SB_Solutions-for-stone-working_#SALL_#AQU_#V1.indd 8 13.04.2023 14:46:11

Sintering

Sintering process

The sintering process converts the blank into a homogeneous and dense carbide with a high level of hardness. The material is sintered at temperatures between 1,300 and 1,500 °C (liquid phase sintering) and sometimes also at high pressure (up to 100 bar). The volume is reduced by up to 50% during this process.

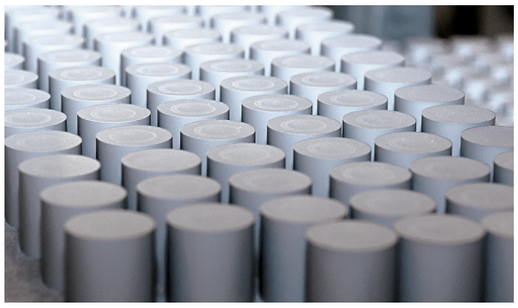

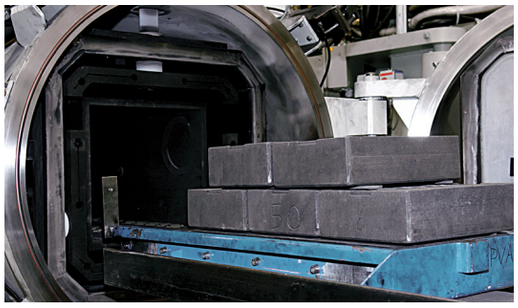

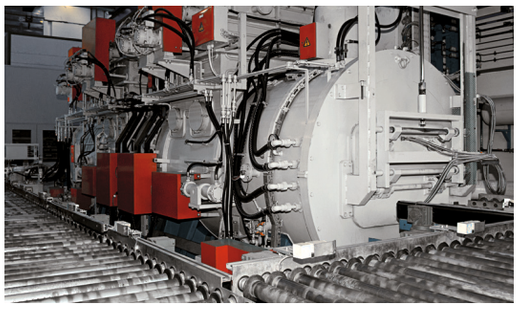



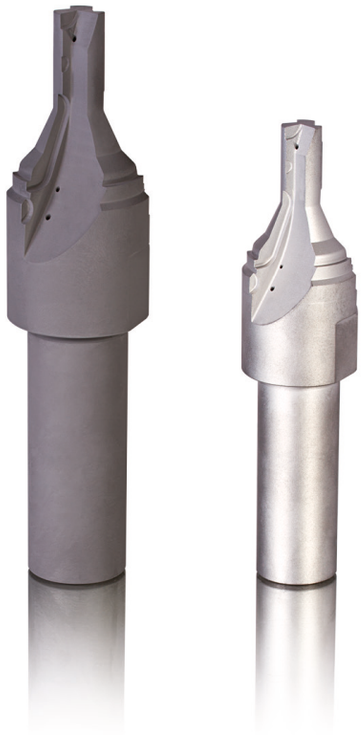

MD_SB_Solutions-for-stone-working_#SALL_#AQU_#V1.indd 9 13.04.2023 14:46:12

Carbide properties depending on the Co contents and WC grain size

Hardness
Cobalt content ▼
Grain size ▼

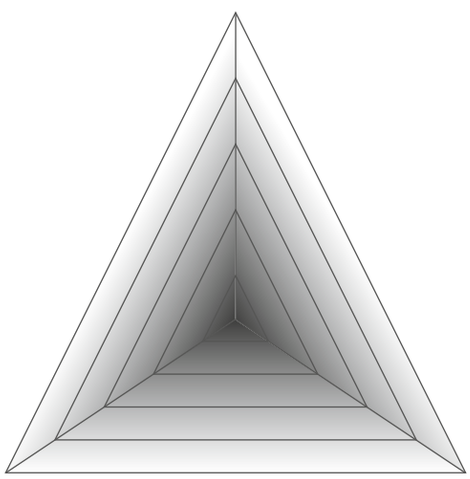

Transverse rupture strength
Cobalt content ▲
Grain size ▼

Toughness
Cobalt content ▲
Grain size ▲



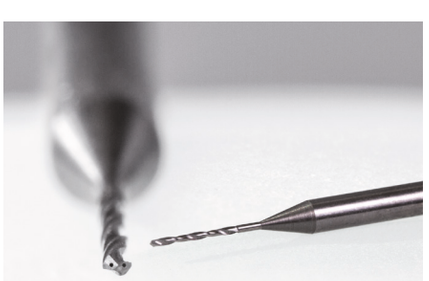



Hardness (wear resistance)

Nozzles for water jet cutting
Type of stress
▲ Wear
▲ Corrosion

Carbide grade
▲ Very high hardness: 2650 HV_{30}
▲ Small grain size: < 0.5 µm
▲ Low Co content: 0.4%
▲ Corrosion resistance when adding Cr_3C_2

Transverse rupture strength

Micro-drills
Type of stress
▲ Wear
▲ Deflection

Carbide grade
▲ T.R.S.: > 4000 MPa
▲ Small grain size: < 0.5 µm + VC
▲ Low Co content ~ 8.5%
▲ High wear resistance: 1930 HV_{30}

Toughness

Hot rolling
Type of stress
▲ Wear due to abrasion
▲ Built-up edge
▲ Impact stress

Carbide grade
▲ Sufficient fracture toughness: Co content 20%
▲ Good wear resistance: 1030 HV_{30}
▲ Medium grain size coarse or extra-coarse

MD_SB_Solutions-for-stone-working_#SALL_#AQU_#V1.indd 10 13.04.2023 14:46:13

Production site



Mamer, Luxembourg

The CERATIZIT Group has its headquarters in Mamer, Luxembourg. Today the plant in Mamer has more than 1,300 employees and concentrates on industrial wear protection, wood, metal and stone working as well as inserts and tools.

Grades for stone working

Sorten für Steinbearbeitung

Nuances pour les applications de la pierre

Gradi applicazioni pietra

Calidades para piedra



Carbide is a hard material with mechanical properties that can be adjusted within a very wide range, given its composition and microstructure. The hardness and toughness range of the CERATIZIT grades includes everything from wear-resistant tool steel to super-hard materials.

Cemented carbide: a smart composition

When starting production, the powder is prepared with a **composition that varies depending on the application.** Each powder mix consists of two phases: a hard material and a binder phase. The hard material provides hardness, i.e. wear resistance, while the metal binder ensures toughness.

Both the grain size and the binder content may be varied to meet specific needs, resulting in **numerous application possibilities.** In metal forming tool construction, cemented carbide consisting of tungsten carbide (WC) and cobalt (Co) is primarily used. The graphic on the left shows this in the form of a microscope image.

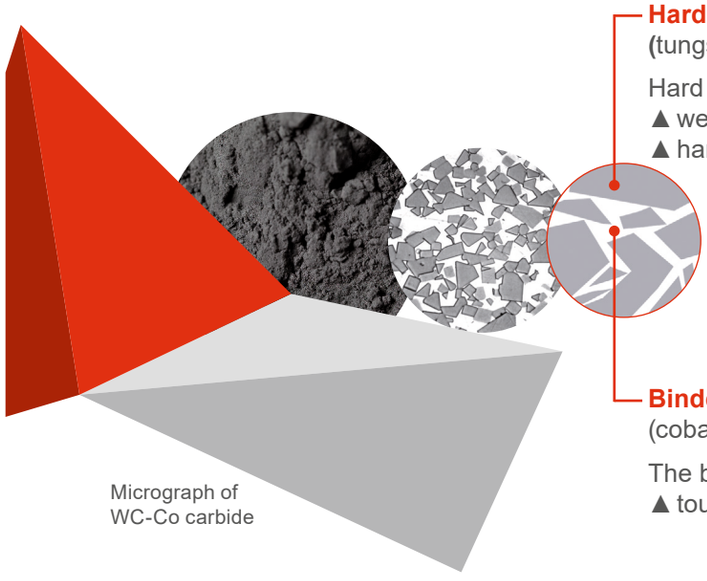

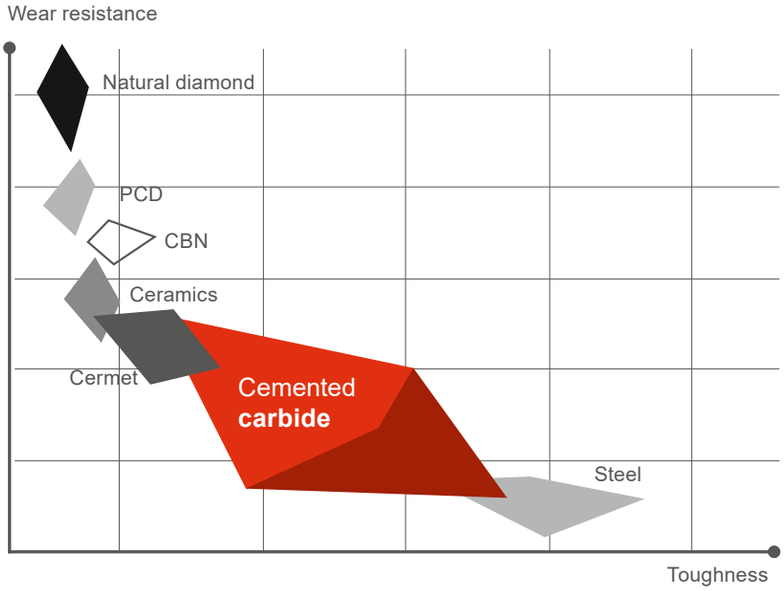

Cemented carbide covers the widest application range.

Criteria relevant for application

- ▲ Wear resistance, hardness
- ▲ Compressive strength
- ▲ Impact strength
- ▲ Transverse rupture strength
- ▲ Tribological properties
- ▲ Specific weight
- ▲ Magnetic properties
- ▲ Modulus of elasticity, rigidity
- ▲ Thermal properties
- ▲ Corrosion resistance, resistance to oxidation
- ▲ Toughness

MD_SB_Solutions-for-stone-working_#SALL_#AQU_#V1.indd 13 13.04.2023 14:46:17

The graphic illustrations below show that the mechanical properties of the carbide mainly depend on the binder content (Co) and the TC grain size. Hardness, i.e. wear resistance, increases inversely proportional to the fracture toughness. This means that the harder the material the more it reacts to notch tensions and impact stress (the 'impact resistance' parameter, which cannot be precisely defined, correlates with the fracture toughness of the material). On the other hand, the transverse rupture strength does not directly depend on the hardness but rather on the TC grain size and the cobalt content. The adhesive wear (tendency to stick), however, decreases with the grain size and the cobalt content of the carbide used. The list of the mentioned interdependencies, which could be extended at will for other wear and failure mechanisms, show that it is only possible to choose the correct carbide grade following a systematic procedure and/or based on experience with similar applications.

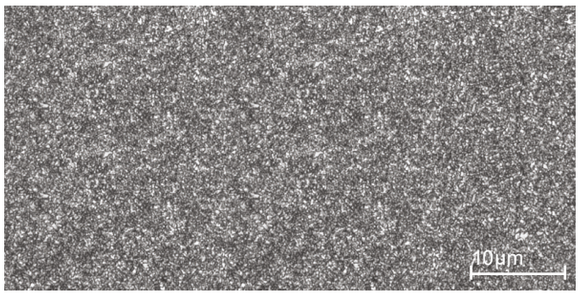

Ultrafine grain

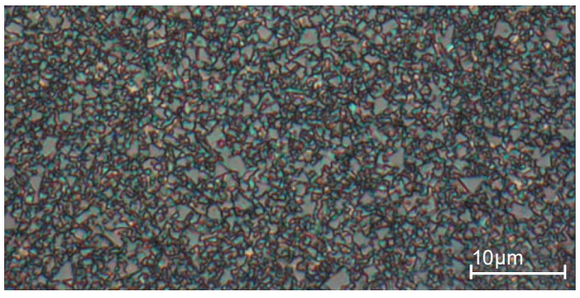

Submicron grain

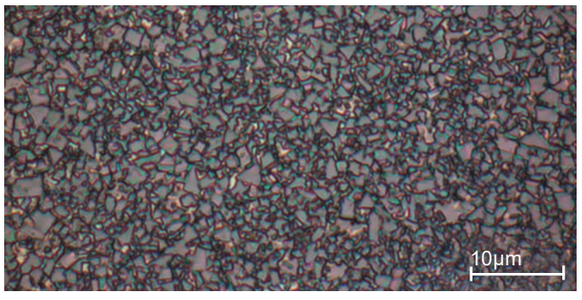

Fine / medium grain

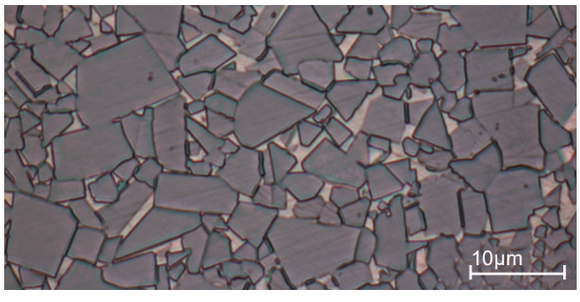

Coarse grain

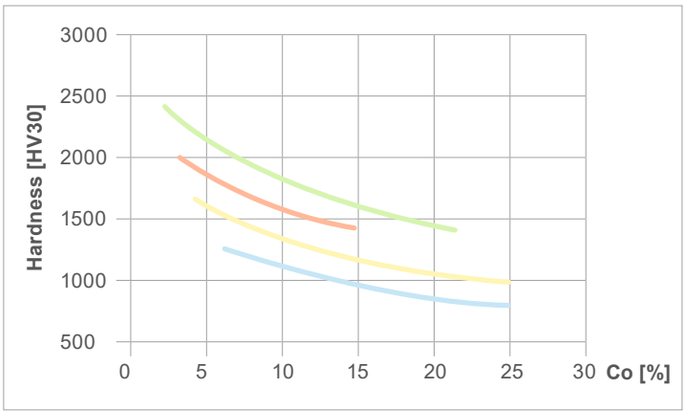

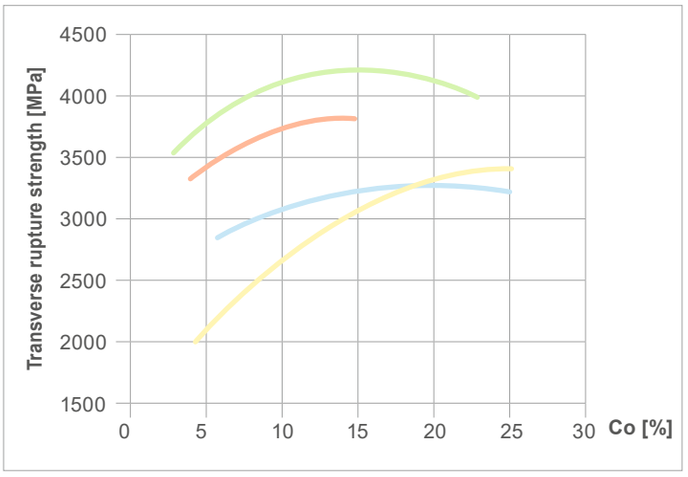

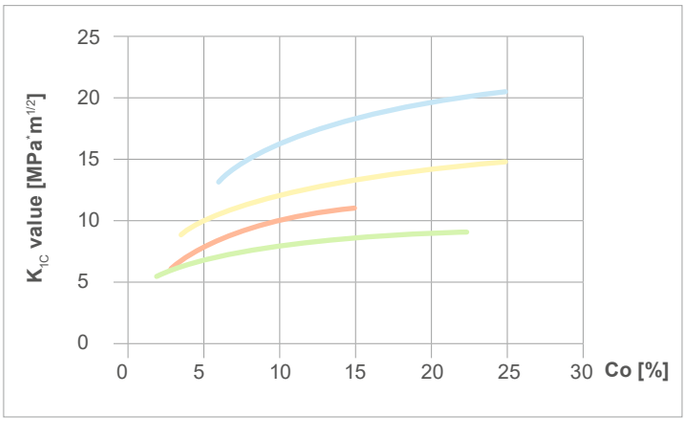

Ultrafine grain
Submicron grain
Fine / medium grain
Coarse grain

MD_SB_Solutions-for-stone-working_#SALL_#AQU_#V1.indd 14 13.04.2023 14:46:18

Composition and properties

Chromium grade

CERATIZIT grade code	ISO code	U.S. code	Binder [m %]	Density [g/cm³]	Hardness HV10	Hardness HV30	Hardness HRA	Transverse Rupture Strength [MPa]	Transverse Rupture Strength [P.S.I.]
CTS06-KC	KCR06	–	3.0	15.30	1950	1910	93.6	2300	334.000

WC-Cobalt – most popular grades

CERATIZIT grade code	ISO code	U.S. code	Binder [m %]	Density [g/cm³]	Hardness HV10	Hardness HV30	Hardness HRA	Transverse Rupture Strength [MPa]	Transverse Rupture Strength [P.S.I.]
CTF12-BC	BC05	C2	6.0	14.95	1640	1620	92.1	2200	319.000
CTM17-BC	HC30/BC20	C1	8.5	14.65	1420	1400	90.4	2800	406.000
CTE20-BC	BC45	–	10.0	14.60	1130	1120	87.6	2600	377.000

Classification of the WC grain size

Average grain size [µm]	Classification	CERATIZIT code
< 0.2	nano	**N**
0.2 – < 0.5	ultrafine	**U**
0.5 – < 0.8	submicron	**S**
0.8 – < 1.3	fine	**F**
1.3 – < 2.5	medium	**M**
2.5 – < 6.0	coarse	**C**
> 6.0	extra-coarse	**E**

MD_SB_Solutions-for-stone-working_#SALL_#AQU_#V1.indd 15 13.04.2023 14:46:18

Innovation

Innovation

Innovation

Innovazione

Innovación



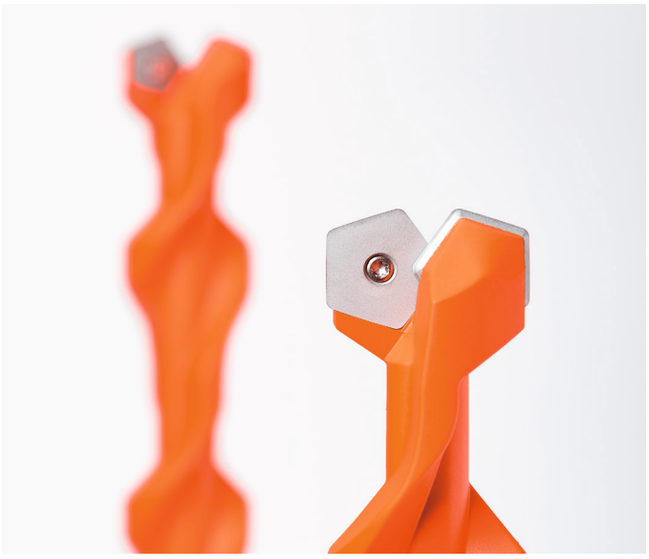

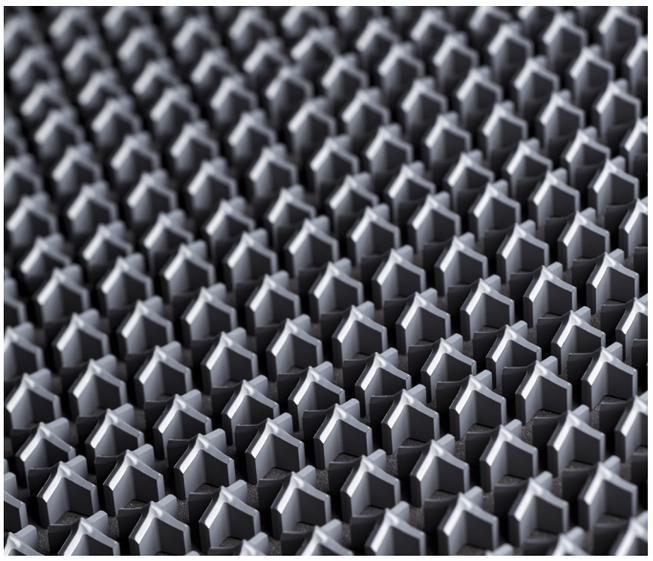



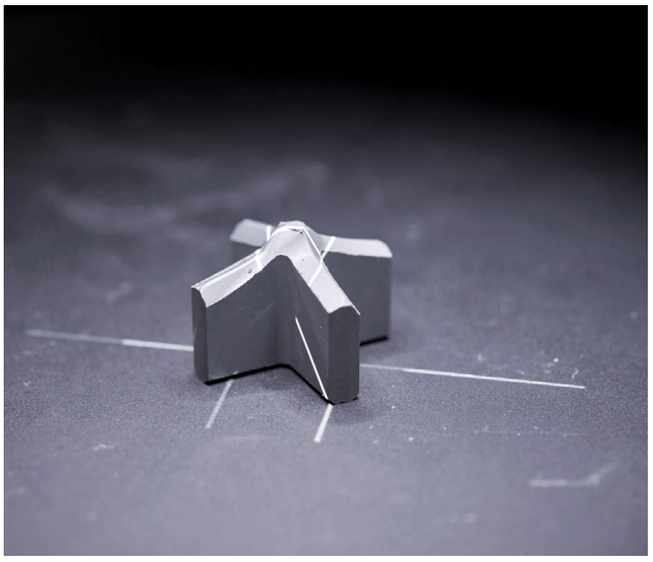





MD_SB_Solutions-for-stone-working_#SALL_#AQU_#V1.indd 17 13.04.2023 14:46:25

Project management in collaboration with our customers

Welcome on board!

The CERATIZIT team is happy to invite you to join us on an innovative journey!

Let us guide you through all the project steps leading to your success. Thanks to our engineering expertise, we can take your ideas and concepts through to the desired destination – your customers. We will travel together through the different steps of this trip, from feasibility study to prototypes and finally to serial production.

Our target is to guide you all along the way in developing new products or improving existing ones. We will take care of your project thanks to our supreme carbide experience, ground production experts and our engineering team. So on each step of the way you will be provided with innovative carbide solutions tailored to your own manufactured tools.

Let's go!



Meeting between the customer and CERATIZIT

Feasibility study

Prototype

MD_SB_Solutions-for-stone-working_#SALL_#AQU_#V1.indd 18 13.04.2023 14:46:29



Serial production



Customer test and approval

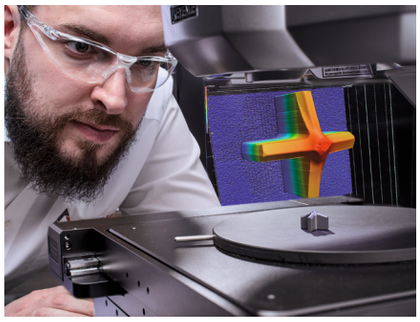

Quality control

A step ahead for your success

MD_SB_Solutions-for-stone-working_#SALL_#AQU_#V1.indd 19 13.04.2023 14:46:31

Hammer drill tips

Hammerbohrerplatten

Plaquettes pour mèche marteau

Placchette per punte a percussione

Puntas de brocas para percusion

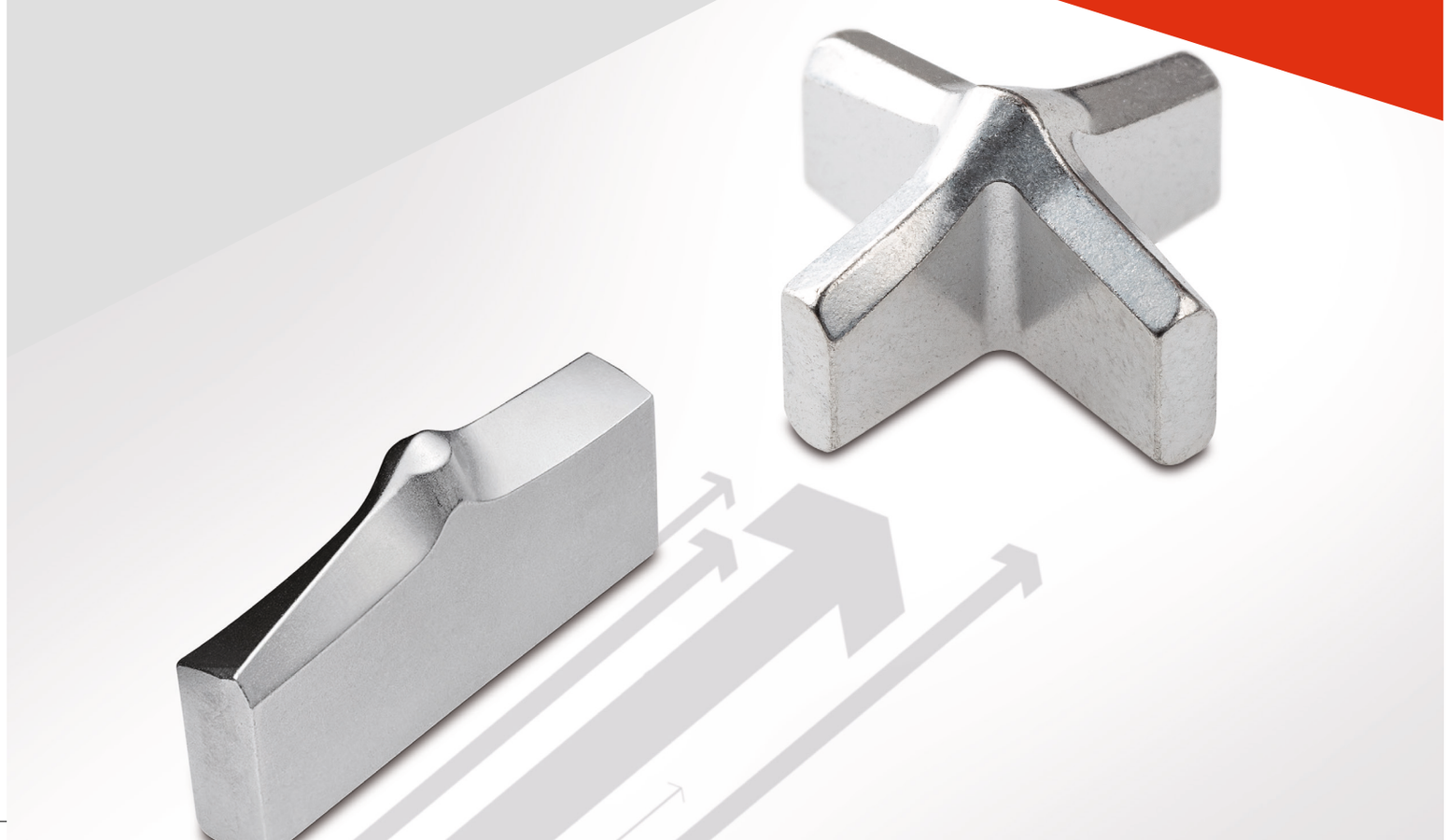

Index

Grades	Page
Composition and properties	22
Applications	23

Premium Hammer Drill Tips	Style	Range Ø	Specificity	PGM Conformity	Page
CT4	Metric (Ø mm)	5 – 35			24
CT4	ANSI (Ø inch)	1/2″ – 1 3/8″			25
CT4	JAPAN (Ø mm)	6.4 – 16.5			25
46000	Metric (Ø mm)	4 – 52		✓	26
46600	ANSI (Ø inch)	1/8″ – 2″			27
47500	JAPAN (Ø mm)	3.4 – 22			28

Standard Hammer Drill Tips	Style	Range Ø	Specificity	PGM Conformity	Page
50850	Metric (Ø mm)	4 – 20		✓	29
50850	ANSI (Ø inch)	5/32″ – 5/16″			29
11384	Metric (Ø mm)	4 – 52	130°	✓	30
17871	ANSI (Ø inch)	1/8″ – 2″	130°		31–32
26000	JAPAN (Ø mm)	4 – 22	130°		33

Special Hammer Drill Tips	Style	Range Ø	Specificity	PGM Conformity	Page
14444	METRIC (Ø mm)	4 – 8/	130°		34
38500	METRIC (Ø mm)	3 – 4.5	130°		34
38911	METRIC (Ø mm)	4 – 6	130°		34
39742	METRIC (Ø mm)	3.5	130°		35
40429	METRIC (Ø mm)	3.5	130°		35

MD_SB_Solutions-for-stone-working_#SALL_#AQU_#V1.indd 21 13.04.2023 14:46:32

Grades for stone working – composition and properties

Most popular grades HAMMER

HAMMER	CERATIZIT grade code	ISO code	Grain	%Co	HV10	TRS
Small Diameter	CTM17-BC	BC20	**M**	8.5	1420	2900
Large Diameter	CTM17-BC	BC20	**M**	8.5	1420	2800

Most popular grades MASONARY

CERATIZIT grade code	ISO code	Grain	%Co	HV10	TRS
CTF12-BC	BC05	**F**	6.0	1640	2200

Classification of the WC grain size

Average grain size [µm]	Classification	CERATIZIT code
< 0.2	nano	**N**
0.2 – < 0.5	ultrafine	**U**
0.5 – < 0.8	submicron	**S**
0.8 – < 1.3	fine	**F**
1.3 – < 2.5	medium	**M**
2.5 – < 6.0	coarse	**C**
> 6.0	extra-coarse	**E**

MD_SB_Solutions-for-stone-working_#SALL_#AQU_#V1.indd 22 13.04.2023 14:46:32

Applications

Type, description	METRIC	ANSI	JAPAN	PGM	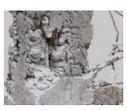 Rebar	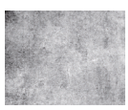 Concrete	 Stone & Rock	 Bricks	 Blocks	 Granit & Marble
CT4	✓	✓	✓			●	●	●	●	●
46000	✓			✓	●	●	●	●	●	
46600		✓			●	●	●	●	●	
47500			✓		●	●	●	●	●	
50850	✓			✓	●	●	●	●	●	
50850		✓			●	●	●	●	●	
11384	✓			✓	●	●	●	●	●	●
17871		✓			●	●	●	●	●	●
26000			✓		●	●	●	●	●	●
14444	✓				●	●	●	●	●	●
38500	✓				●	●	●	●	●	●
38911	✓				●	●	●	●	●	●
39742	✓				●	●	●	●	●	●
40429	✓				●	●	●	●	●	●

● Optimum
○ Not optimum

MD_SB_Solutions-for-stone-working_#SALL_#AQU_#V1.indd 23 13.04.2023 14:46:33

Hammer drill tips – METRIC

CT4



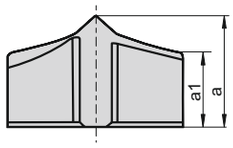

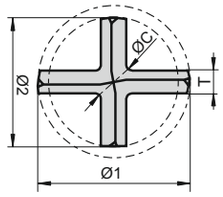

Ø [mm]	Height a [mm]	Height Tol. [mm]	Height a1 [mm]	Ø1 [mm]	Ø1 Tol. [mm]	Ø2 [mm]	Ø2 Tol. [mm]	Cent. Ø [mm]	Thickness [mm]
5.00	4.100	±0.10	2.980	5.285	±0.075	5.085	±0.075	1.590	0.950
5.50	4.550	±0.10	3.270	5.785	±0.075	5.585	±0.075	1.590	0.950
6.00	4.850	±0.10	3.530	6.285	±0.075	6.085	±0.075	1.960	1.150
6.50	5.200	±0.10	3.820	6.725	±0.075	6.525	±0.075	1.960	1.150
7.00	5.550	±0.10	4.090	7.285	±0.075	7.085	±0.075	1.960	1.150
8.00	5.650	±0.15	3.940	8.285	±0.075	8.085	±0.075	2.610	1.550
10.00	7.050	±0.15	4.850	10.300	±0.090	10.000	±0.090	2.890	1.750
12.00	8.500	±0.15	5.820	12.340	±0.090	12.040	±0.090	3.250	1.950
14.00	9.900	±0.15	6.770	14.355	±0.105	14.055	±0.105	3.500	2.125
16.00	9.650	±0.15	6.070	16.355	±0.105	16.055	±0.105	4.090	2.425
18.00	11.400	±0.25	6.950	18.355	±0.105	17.955	±0.105	4.800	2.925
20.00	12.550	±0.25	7.670	20.430	±0.120	20.030	±0.120	4.800	2.925
22.00	12.700	±0.25	7.330	22.380	±0.120	21.980	±0.120	5.640	3.400
23.00	13.100	±0.25	7.600	23.380	±0.120	22.880	±0.120	5.640	3.400
24.00	13.800	±0.25	7.920	24.380	±0.120	23.880	±0.120	5.640	3.400
25.00	14.300	±0.25	8.280	25.380	±0.120	24.880	±0.120	5.640	3.400
26.00	14.750	±0.25	8.600	26.380	±0.120	25.880	±0.120	5.640	3.400
28.00	15.950	±0.25	9.230	28.380	±0.120	27.880	±0.120	6.510	3.900
30.00	17.000	±0.25	9.870	30.380	±0.120	29.880	±0.120	6.510	3.900
32.00	18.150	±0.25	10.510	32.520	±0.150	31.770	±0.150	7.380	4.400
35.00	19.350	±0.25	11.460	35.520	±0.150	34.770	±0.150	7.380	4.400

Codification code example: CT4- 5.00 CTM17-BC

MD_SB_Solutions-for-stone-working_#SALL_#AQU_#V1.indd 24 13.04.2023 14:46:34

Hammer drill tips – ANSI

CT4



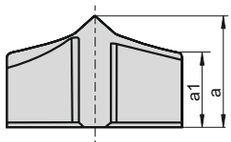

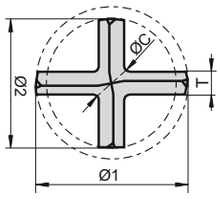

Ø [inch]	Height a [mm]	Height Tol. [mm]	Height a1 [mm]	Ø1 [mm]	Ø1 Tol. [mm]	Ø2 [mm]	Ø2 Tol. [mm]	Cent. Ø [mm]	Thickness [mm]
7/16”	8.30	±0.10	5.70	11.76	±0.10	11.56	±0.10	3.25	1.950
1/2”	9.15	±0.10	5.99	13.31	±0.10	12.90	±0.10	3.50	2.125
5/8”	9.85	±0.10	5.90	16.61	±0.10	16.20	±0.10	4.09	2.425
9/16”	10.25	±0.10	6.74	14.89	±0.10	14.50	±0.10	3.50	2.125
3/4”	11.55	±0.10	6.74	19.84	±0.15	19.44	±0.15	4.80	2.925
7/8”	12.15	±0.10	6.68	23.14	±0.15	22.64	±0.15	5.64	3.400
1”	13.25	±0.10	7.11	26.32	±0.15	25.82	±0.15	5.64	3.400
1 1/8”	14.70	±0.10	7.67	29.66	±0.19	29.16	±0.19	6.51	3.900
1 1/4”	16.80	±0.10	9.12	32.83	±0.19	32.08	±0.19	7.38	4.400
1 3/8”	16.80	±0.10	8.84	36.01	±0.19	35.26	±0.19	7.38	4.400

Codification code example: CT4- 1/2” CTM17-BC

Hammer drill tips – JAPAN

CT4



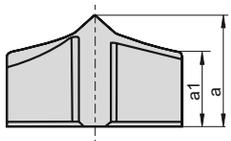

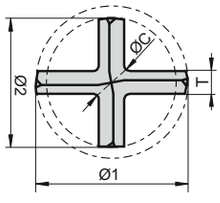

Ø [mm]	Height a [mm]	Height Tol. [mm]	Height a1 [mm]	Ø1 [mm]	Ø1 Tol. [mm]	Ø2 [mm]	Ø2 Tol. [mm]	Cent. Ø [mm]	Thickness [mm]
6.40	5.250	±0.10	3.780	6.525	±0.125	6.325	±0.125	1.960	1.150
8.00	5.950	±0.15	4.060	8.125	±0.125	7.925	±0.125	2.610	1.550
8.50	6.150	±0.15	4.180	8.625	±0.125	8.325	±0.125	2.610	1.550
10.50	7.400	±0.15	5.120	10.650	±0.15	10.350	±0.15	2.890	1.750
12.50	9.000	±0.15	6.050	12.650	±0.15	12.350	±0.15	3.250	1.950
12.70	9.100	±0.15	6.140	12.850	±0.15	12.550	±0.15	3.250	1.950
14.50	10.450	±0.15	6.970	14.650	±0.15	14.350	±0.15	3.500	2.125
16.50	10.100	±0.25	6.370	16.650	±0.15	16.350	±0.15	4.090	2.425

Codification code example: CT4- 6.40 CTM17-BC

MD_SB_Solutions-for-stone-working_#SALL_#AQU_#V1.indd 25 13.04.2023 14:46:34

Hammer drill tips – METRIC

46000



Conforming to PGM

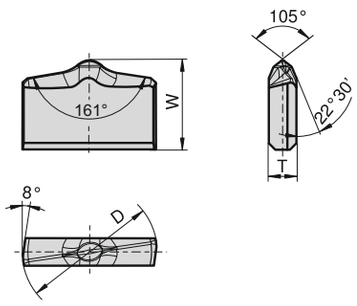

Ø [mm]	D [mm]	Tol. [mm]	W [mm]	Tol. [mm]	T [mm]	Tol. [mm]
4.00	4.285	±0.075	4.15	±0.10	0.950	±0.05
5.00	5.285	±0.075	4.65	±0.10	1.350	±0.05
5.50	5.785	±0.075	4.95	±0.10	1.350	±0.05
6.00	6.285	±0.075	4.85	±0.10	1.550	±0.05
6.50	6.725	±0.075	5.30	±0.10	1.550	±0.05
7.00	7.285	±0.075	5.35	±0.10	1.550	±0.05
8.00	8.285	±0.075	5.95	±0.15	1.950	±0.05
8.50	8.740	±0.09	6.30	±0.15	1.950	±0.05
9.00	9.300	±0.09	6.30	±0.15	1.950	±0.05
10.00	10.300	±0.09	6.85	±0.15	2.125	±0.075
10.50	10.800	±0.09	7.30	±0.15	2.125	±0.075
11.00	11.340	±0.09	7.70	±0.15	2.125	±0.075
12.00	12.340	±0.09	8.25	±0.15	2.425	±0.075
13.00	13.355	±0.105	8.70	±0.15	2.725	±0.075
14.00	14.355	±0.105	8.95	±0.15	2.925	±0.075
15.00	15.355	±0.105	9.35	±0.15	2.925	±0.075
16.00	16.355	±0.105	9.35	±0.15	2.925	±0.075
17.00	17.355	±0.105	9.35	±0.15	2.925	±0.075
18.00	18.355	±0.105	9.65	±0.25	3.400	±0.10
19.00	19.430	±0.12	10.40	±0.25	3.400	±0.10
20.00	20.430	±0.12	11.25	±0.25	3.400	±0.10
22.00	22.380	±0.12	12.30	±0.25	3.900	±0.10
23.00	23.380	±0.12	12.30	±0.25	3.900	±0.10
24.00	24.380	±0.12	13.30	±0.25	4.400	±0.10
25.00	25.380	±0.12	13.25	±0.25	4.400	±0.10
26.00	26.380	±0.12	13.25	±0.25	4.400	±0.10
28.00	28.380	±0.12	14.70	±0.25	4.900	±0.10
29.00	29.380	±0.12	14.70	±0.25	4.900	±0.10
30.00	30.380	±0.12	14.70	±0.25	4.900	±0.10
32.00	32.520	±0.15	16.80	±0.25	5.400	±0.10
35.00	35.520	±0.15	18.00	±0.25	5.900	±0.10
36.00	36.520	±0.15	18.25	±0.25	5.900	±0.10
38.00	38.570	±0.20	18.25	±0.25	5.900	±0.10
40.00	40.545	±0.225	19.75	±0.25	6.400	±0.10
42.00	42.545	±0.225	19.25	±0.25	6.400	±0.10
44.00	44.545	±0.225	20.75	±0.25	6.900	±0.10
45.00	45.545	±0.225	20.75	±0.25	6.900	±0.10
50.00	50.635	±0.265	22.75	±0.25	6.900	±0.10
52.00	52.635	±0.265	23.50	±0.25	6.900	±0.10

Codification code example: 46000- 4.0 CTM17-BC

MD_SB_Solutions-for-stone-working_#SALL_#AQU_#V1.indd 26 13.04.2023 14:46:35

Hammer drill tips – ANSI

46600



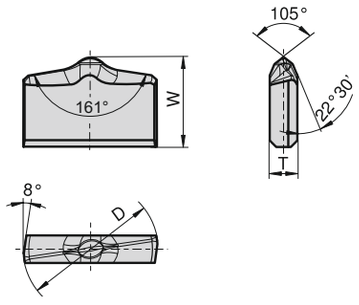

Ø [inch]	D [mm]	Tol. [mm]	W [mm]	Tol. [mm]	T [mm]	Tol. [mm]
1/8″	3.485	±0.075	4.00	±0.10	0.950	±0.050
5/32″	4.265	±0.075	4.15	±0.10	0.950	±0.050
11/64″	4.675	±0.075	4.65	±0.10	1.150	±0.050
3/16″	5.130	±0.10	4.65	±0.10	1.150	±0.050
13/64″	5.510	±0.10	5.25	±0.10	1.150	±0.050
7/32″	5.920	±0.10	5.30	±0.10	1.350	±0.050
15/64″	6.300	±0.10	5.30	±0.10	1.550	±0.050
1/4″	6.710	±0.10	5.30	±0.10	1.550	±0.050
17/64″	7.110	±0.10	6.15	±0.10	1.550	±0.050
9/32″	7.620	±0.10	6.15	±0.10	1.550	±0.050
5/16″	8.410	±0.10	6.45	±0.10	1.950	±0.050
3/8″	10.010	±0.10	6.85	±0.10	2.125	±0.075
7/16″	11.765	±0.125	7.70	±0.10	2.125	±0.075
1/2″	13.335	±0.125	8.70	±0.10	2.725	±0.075
9/16″	14.915	±0.125	9.10	±0.10	2.925	±0.075
5/8″	16.635	±0.125	9.40	±0.10	2.925	±0.075
11/16″	18.235	±0.125	9.65	±0.10	3.400	±0.100
3/4″	19.840	±0.150	11.55	±0.10	3.400	±0.100
13/16″	21.410	±0.150	11.55	±0.10	3.400	±0.100
27/32″	22.230	±0.150	12.15	±0.10	3.900	±0.100
7/8″	23.140	±0.150	12.15	±0.10	3.900	±0.100
15/16″	24.740	±0.150	13.25	±0.10	4.400	±0.100
1″	26.320	±0.150	13.25	±0.10	4.400	±0.100
1 1/16″	28.080	±0.190	14.70	±0.10	4.900	±0.100
1 1/8″	29.660	±0.190	14.70	±0.10	4.900	±0.100
1 1/4″	32.830	±0.190	16.80	±0.10	5.400	±0.100
1 5/16″	34.530	±0.190	16.80	±0.10	5.400	±0.100
1 3/8″	36.010	±0.190	16.80	±0.10	5.400	±0.100
1 7/16″	37.580	±0.190	17.35	±0.10	5.900	±0.100
1 1/2″	39.180	±0.190	17.35	±0.10	5.900	±0.100
1 9/16″	40.585	±0.255	19.75	±0.10	6.400	±0.100
1 3/4″	45.265	±0.255	20.75	±0.10	6.900	±0.100
2″	51.815	±0.255	23.50	±0.25	6.900	±0.100

Codification code example: 46600- 1/8” CTM17-BC

MD_SB_Solutions-for-stone-working_#SALL_#AQU_#V1.indd 27 13.04.2023 14:46:35

Hammer drill tips – JAPAN

47500



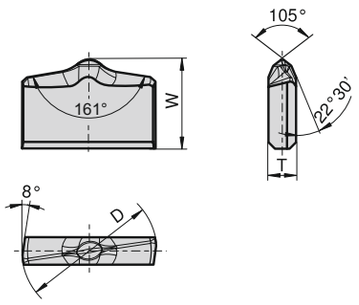

Ø [mm]	D [mm]	Tol. [mm]	W [mm]	Tol. [mm]	T [mm]	Tol. [mm]
3.4	3.500	±0.10	3.75	±0.10	0.950	±0.05
3.5	3.520	±0.10	3.75	±0.10	0.950	±0.05
3.8	3.900	±0.10	3.75	±0.10	0.950	±0.05
4.0	4.100	±0.10	3.95	±0.10	0.950	±0.05
4.3	4.400	±0.10	4.15	±0.10	0.950	±0.05
4.8	4.900	±0.10	4.45	±0.10	0.950	±0.05
5.0	5.100	±0.10	4.65	±0.10	1.150	±0.05
5.3	5.400	±0.10	4.65	±0.10	1.150	±0.05
5.4	5.500	±0.10	4.95	±0.10	1.350	±0.05
6.0	6.100	±0.10	4.85	±0.10	1.350	±0.05
6.4	6.525	±0.125	5.15	±0.10	1.350	±0.05
7.0	7.125	±0.125	5.35	±0.10	1.550	±0.05
8.0	8.125	±0.125	5.95	±0.15	1.950	±0.05
9.0	9.125	±0.125	6.30	±0.15	1.925	±0.075
9.5	9.625	±0.125	6.30	±0.15	1.925	±0.075
10.0	10.125	±0.125	6.85	±0.15	2.125	±0.075
10.5	10.650	±0.15	7.30	±0.15	2.125	±0.075
11.0	11.150	±0.15	7.70	±0.15	2.125	±0.075
12.0	12.150	±0.15	8.25	±0.15	2.425	±0.075
12.5	12.650	±0.15	8.25	±0.15	2.425	±0.075
12.7	12.850	±0.15	8.25	±0.15	2.425	±0.075
13.5	13.650	±0.15	8.70	±0.15	2.725	±0.075
14.3	14.450	±0.15	8.95	±0.15	2.925	±0.075
14.5	14.650	±0.15	8.95	±0.15	2.925	±0.075
15.0	15.150	±0.15	9.35	±0.25	2.925	±0.075
16.0	16.150	±0.15	9.35	±0.25	2.925	±0.075
16.5	16.650	±0.15	9.35	±0.25	2.925	±0.075
17.0	17.150	±0.15	9.35	±0.25	2.925	±0.075
17.5	17.650	±0.15	9.35	±0.25	2.925	±0.075
18.0	18.175	±0.175	9.65	±0.25	3.400	±0.10
19.0	19.175	±0.175	10.40	±0.25	3.400	±0.10
20.0	20.175	±0.175	11.25	±0.25	3.400	±0.10
21.5	21.675	±0.175	12.15	±0.25	3.900	±0.10
22.0	22.175	±0.175	12.30	±0.25	3.900	±0.10

Codification code example: 47500- 3.4 CTM17-BC

MD_SB_Solutions-for-stone-working_#SALL_#AQU_#V1.indd 28 13.04.2023 14:46:35

Hammer drill tips – METRIC

50850



Conforming to PGM

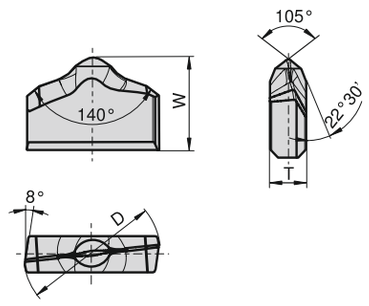

Ø [mm]	D [mm]	Tol. [mm]	W [mm]	Tol. [mm]	T [mm]	Tol. [mm]
4.0	4.285	±0.075	3.60	±0.10	1.350	±0.05
5.0	5.285	±0.075	4.10	±0.10	1.550	±0.05
5.5	5.785	±0.075	4.50	±0.10	1.550	±0.05
6.0	6.285	±0.075	4.90	±0.10	1.750	±0.05
6.5	6.785	±0.075	5.30	±0.10	1.750	±0.05
7.0	7.285	±0.075	5.70	±0.15	1.950	±0.05
8.0	8.285	±0.075	5.75	±0.15	2.250	±0.05
10.0	10.300	±0.090	7.15	±0.15	2.425	±0.075
12.0	12.340	±0.090	8.55	±0.15	2.725	±0.075
20.0	20.430	±0.120	12.25	±0.25	3.900	±0.100

Codification code example: 50850- 4.0 CTM17-BC

Hammer drill tips – ANSI

50850



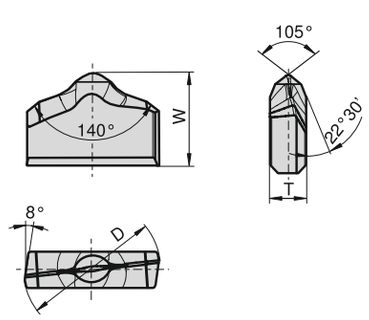

Ø [mm]	D [mm]	Tol. [mm]	W [mm]	Tol. [mm]	T [mm]	Tol. [mm]
5/32″	4.265	±0.075	3.60	±0.10	1.350	±0.05
3/16″	5.130	±0.100	4.10	±0.10	1.550	±0.05
7/32″	5.920	±0.100	4.50	±0.10	1.550	±0.05
5/16″	8.410	±0.100	5.75	±0.15	2.250	±0.05

Codification code example: 50850- 5/32” CTM17-BC

MD_SB_Solutions-for-stone-working_#SALL_#AQU_#V1.indd 29 13.04.2023 14:46:36

Hammer drill tips – METRIC

11384

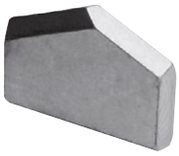

Conforming to PGM

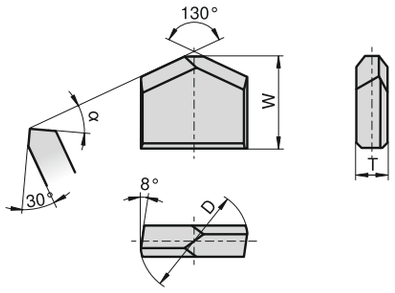

Ø [mm]	D [mm]	Tol. [mm]	W [mm]	Tol. [mm]	T [mm]	Tol. [mm]	α
4.0	4.21	+0.15	4.5	+0.20	1.0	-0.10	20°
5.0	5.21	+0.15	5.0	+0.20	1.2	-0.10	20°
5.5	5.71	+0.15	5.3	+0.20	1.4	-0.10	20°
6.0	6.21	+0.15	5.3	+0.20	1.4	-0.10	20°
6.5	6.65	+0.15	5.8	+0.20	1.4	-0.10	20°
7.0	7.21	+0.15	5.8	+0.20	1.6	-0.10	20°
8.0	8.21	+0.15	6.5	+0.30	2.0	-0.10	20°
8.5	8,65	+0.18	6.9	+0.30	2.0	-0.10	20°
9.0	9.21	+0.18	6.9	+0.30	2.0	-0.15	20°
10.0	10.21	+0.18	7.5	+0.30	2.2	-0.15	20°
10.5	10.71	+0.18	8.0	+0.30	2.2	-0.15	20°
11.0	11.25	+0.18	8.5	+0.30	2.2	-0.15	20°
12.0	12.25	+0.18	9.0	+0.30	2.5	-0.15	20°
13.0	13.25	+0.21	9.5	+0.30	2.8	-0.15	30°
14.0	14.25	+0.21	9.8	+0.30	3.0	-0.15	30°
15.0	15.25	+0.21	10.5	+0.50	3.0	-0.15	30°
16.0	16.25	+0.21	10.5	+0.50	3.0	-0.15	30°
17.0	17.25	+0.21	10.5	+0.50	3.0	-0.15	30°
18.0	18.25	+0.21	11.0	+0.50	3.5	-0.20	30°
19.0	19.31	+0.24	12.0	+0.50	3.5	-0.20	30°
20.0	20.31	+0.24	13.0	+0.50	3.5	-0.20	30°
22.0	22.26	+0.24	14.0	+0.50	4.0	-0.20	30°
23.0	23.26	+0.24	14.0	+0.50	4.0	-0.20	30°
24.0	24.26	+0.24	15.0	+0.50	4.5	-0.20	30°
25.0	25.26	+0.24	15.0	+0.50	4.5	-0.20	30°
26.0	26.26	+0.24	15.0	+0.50	4.5	-0.20	30°
28.0	28.26	+0.24	17.0	+0.50	5.0	-0.20	30°
29.0	29,26	+0.24	17.0	+0.50	5.0	-0.20	30°
30.0	30.26	+0.24	17.0	+0.50	5.0	-0.20	30°
32.0	32.37	+0.30	19.0	+0.50	5.5	-0.20	30°
35.0	35.37	+0.30	20.5	+0.50	6.0	-0.20	30°
36.0	36.37	+0.30	21.0	+0.50	6.0	-0.20	30°
37.0	37.27	+0.40	21.0	+0.50	6.0	-0.20	30°
38.0	38.37	+0.40	21.0	+0.50	6.0	-0.20	30°
40.0	40.32	+0.45	23.0	+0.50	6.5	-0.20	30°
42.0	42.32	+0.45	24.0	+0.50	6.5	-0.20	30°
44.0	44.32	+0.45	24.0	+0.50	7.0	-0.20	30°
45.0	45.32	+0.45	24.5	+0.50	7.0	-0.20	30°
50.0	50.37	+0.55	26.0	+0.50	7.0	-0.20	30°
52.0	52.37	+0.55	26.0	+0.50	7.0	-0.20	30°

Codification code example: 11384- 4.0 CTM17-BC

MD_SB_Solutions-for-stone-working_#SALL_#AQU_#V1.indd 30 13.04.2023 14:46:37

Hammer drill tips – ANSI

17871 Inch

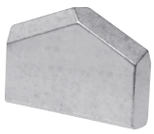

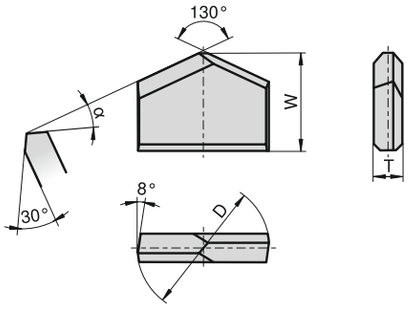

Ø [inch]	ANSI code	D [inch]	Tol. [inch]	W [inch]	Tol. [inch]	T [inch]	Tol. [inch]	α
1/8″	HDG 2	0.140	-0.006	0.165	+0.010	0.035	-0.004	20°
5/32″	HDG 2.5	0.171	-0.006	0.177	+0.008	0.039	-0.004	20°
11/64″	HDG 2.75	0.187	-0.006	0.197	+0.008	0.047	-0.004	20°
3/16″	HDG 3	0.206	-0.008	0.197	+0.008	0.047	-0.004	20°
13/64″	HDG 3.25	0.221	-0.008	0.220	+0.008	0.047	-0.004	20°
7/32″	HDG 3.5	0.237	-0.008	0.220	+0.008	0.055	-0.004	20°
15/64″	HDG 3.75	0.252	-0.008	0.220	+0.008	0.055	-0.004	20°
1/4″	HDG 4	0.268	-0.008	0.220	+0.008	0.055	-0.004	20°
17/64″	HDG 4.24	0.275	-0.008	0.256	+0.008	0.063	-0.004	20°
9/32″	HDG 4.5	0.304	-0.008	0.256	+0.008	0.063	-0.004	20°
5/16″	HDG 5	0.335	-0.008	0.256	+0.008	0.078	-0.004	20°
3/8″	HDG 6	0.398	-0.008	0.295	+0.008	0.086	-0.006	20°
7/16″	HDG 7	0.468	-0.010	0.334	+0.008	0.086	-0.006	20°
1/2″	HDG 8	0.530	-0.010	0.374	+0.008	0.110	-0.006	30°
9/16″	HDG 9	0.592	-0.010	0.374	+0.008	0.118	-0.006	30°
5/8″	HDG 10	0.660	-0.010	0.413	+0.008	0.118	-0.006	30°
11/16″	HDG 11	0.723	-0.010	0.433	+0.008	0.137	-0.008	30°
3/4″	HDG 12	0.787	-0.012	0.512	+0.008	0.137	-0.008	30°
13/16″	HDG 13	0.849	-0.012	0.512	+0.008	0.137	-0.008	30°
27/32″	HDG 13.5	0.881	-0.012	0.551	+0.008	0.157	-0.008	30°
7/8″	HDG 14	0.917	-0.012	0.551	+0.008	0.157	-0.008	30°
15/16″	HDG 15	0.980	-0.012	0.590	+0.008	0.177	-0.008	30°
1″	HDG 16	1.042	-0.012	0.590	+0.008	0.177	-0.008	30°
1 1/8″	HDG 18	1.175	-0.015	0.669	+0.008	0.196	-0.008	30°
1 1/4″	HDG 20	1.300	-0.015	0.748	+0.008	0.216	-0.008	30°
1 3/8″	HDG 22	1.425	-0.015	0.748	+0.008	0.216	-0.008	30°
1 1/2″	HDG 24	1.550	-0.015	0.827	+0.008	0.236	-0.008	30°
2″	–	2.050	-0.020	1.024	+0.020	0.276	-0.008	30°

Codification code example: 17871- 1/8″ CTM17-BC

MD_SB_Solutions-for-stone-working_#SALL_#AQU_#V1.indd 31 13.04.2023 14:46:37

Hammer drill tips – ANSI

17871



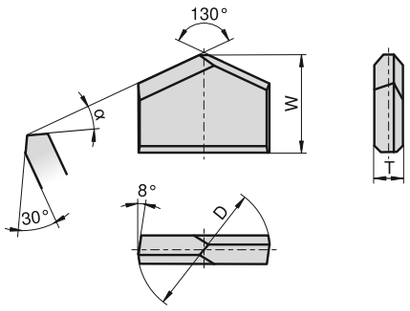

Ø [inch]	ANSI code	D [mm]	Tol. [mm]	W [mm]	Tol. [mm]	T [mm]	Tol. [mm]	α
1/8″	HDG 2	3.55	-0.15	4.16	+0.25	0.9	-0.10	20°
5/32″	HDG 2.5	4.34	-0.15	4.50	+0.20	1.0	-0.10	20°
11/64″	HDG 2.75	4.75	-0.15	5.00	+0.20	1.2	-0.10	20°
3/16″	HDG 3	5.23	-0.20	5.00	+0.20	1.2	-0.10	20°
13/64″	HDG 3.25	5.61	-0.20	5.60	+0.20	1.2	-0.10	20°
7/32″	HDG 3.5	6.02	-0.20	5.60	+0.20	1.4	-0.10	20°
15/64″	HDG 3.75	6.40	-0.20	5.60	+0.20	1.4	-0.10	20°
1/4″	HDG 4	6.81	-0.20	5.60	+0.20	1.4	-0.10	20°
17/64″	HDG 4.24	7.31	-0.20	6.60	+0.10	1.6	-0.10	20°
9/32″	HDG 4.5	7.72	-0.20	6.60	+0.20	1.6	-0.10	20°
5/16″	HDG 5	8.51	-0.20	6.60	+0.20	2.0	-0.10	20°
3/8″	HDG 6	10.11	-0.20	7.50	+0.20	2.2	-0.15	20°
7/16″	HDG 7	11.89	-0.25	8.50	+0.20	2.2	-0.15	20°
1/2″	HDG 8	13.46	-0.25	9.50	+0.20	2.8	-0.15	30°
9/16″	HDG 9	15.04	-0.25	9.50	+0.20	3.0	-0.15	30°
5/8″	HDG 10	16.76	-0.25	10.50	+0.20	3.0	-0.15	30°
11/16″	HDG 11	18.36	-0.25	11.00	+0.20	3.5	-0.20	30°
3/4″	HDG 12	19.99	-0.30	13.00	+0.20	3.5	-0.20	30°
13/16″	HDG 13	21.50	-0.30	13.00	+0.20	3.5	-0.20	30°
27/32″	HDG 13.5	22.38	-0.30	14.00	+0.20	4.0	-0.20	30°
7/8″	HDG 14	23.29	-0.30	14.00	+0.20	4.0	-0.20	30°
15/16″	HDG 15	24.89	-0.30	15.00	+0.20	4.5	-0.20	30°
1″	HDG 16	26.47	-0.30	15.00	+0.20	4.5	-0.20	30°
1 1/8″	HDG 18	29.85	-0.38	17.00	+0.20	5.0	-0.20	30°
1 1/4″	HDG 20	33.02	-0.38	19.00	+0.20	5.5	-0.20	30°
1 3/8″	HDG 22	36.20	-0.38	19.00	+0.20	5.5	-0.20	30°
1 1/2″	HDG 24	39.37	-0.38	21.00	+0.20	6.0	-0.20	30°
2″	–	52.07	-0.51	26.00	+0.50	7.0	-0.20	30°

Codification code example: 17871- 1/8″ CTM17-BC

MD_SB_Solutions-for-stone-working_#SALL_#AQU_#V1.indd 32 13.04.2023 14:46:37

Hammer drill tips – JAPAN

26000



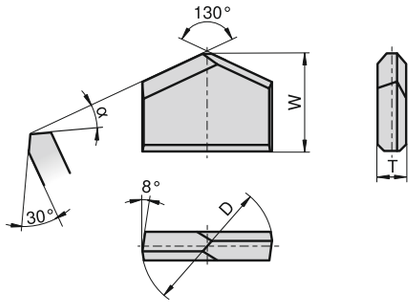

Ø [mm]	D [mm]	Tol. [mm]	W [mm]	Tol. [mm]	T [mm]	Tol. [mm]	α
4.0	4.0	+0.20	4.2	+0.20	1.0	-0.10	20°
4.3	4.3	+0.20	4.5	+0.20	1.0	-0.10	20°
4.8	4.8	+0.20	4.8	+0.20	1.0	-0.10	20°
5.0	5.0	+0.20	5.0	+0.20	1.2	-0.10	20°
6.0	6.0	+0.20	5.3	+0.20	1.4	-0.10	20°
6.4	6.4	+0.25	5.6	+0.20	1.4	-0.10	20°
7.0	7.0	+0.25	5.8	+0.20	1.6	-0.10	20°
8.0	8.0	+0.25	6.5	+0.30	2.0	-0.10	20°
9.0	9.0	+0.25	6.9	+0.30	2.0	-0.15	20°
9.5	9.5	+0.25	6.9	+0.30	2.0	-0.15	20°
10.0	10.0	+0.25	7.5	+0.30	2.2	-0.15	20°
10.5	10.5	+0.30	8.0	+0.30	2.2	-0.15	20°
11.0	11.0	+0.30	8.5	+0.30	2.2	-0.15	20°
12.0	12.0	+0.30	9.0	+0.30	2.5	-0.15	20°
12.5	12.5	+0.30	9.0	+0.30	2.5	-0.15	20°
12.7	12.7	+0.30	9.0	+0.30	2.5	-0.15	20°
13.5	13.5	+0.30	9.5	+0.30	2.8	-0.15	30°
14.5	14.5	+0.30	9.8	+0.30	3.0	-0.15	30°
15.0	15.0	+0.30	10.5	+0.50	3.0	-0.15	30°
16.0	16.0	+0.30	10.5	+0.50	3.0	-0.15	30°
16.5	16.5	+0.30	10.5	+0.50	3.0	-0.15	30°
17.0	17.0	+0.30	10.5	+0.50	3.0	-0.15	30°
17.5	17.5	+0.30	10.5	+0.50	3.0	-0.15	30°
18.0	18.0	+0.35	11.0	+0.50	3.5	-0.20	30°
19.0	19.0	+0.35	12.0	+0.50	3.5	-0.20	30°
20.0	20.0	+0.35	13.0	+0.50	3.5	-0.20	30°
22.0	22.0	+0.35	14.0	+0.50	4.0	-0.20	30°

Codification code example: 26000- 4.0 CTM17-BC

MD_SB_Solutions-for-stone-working_#SALL_#AQU_#V1.indd 33 13.04.2023 14:46:37

Hammer drill tips – METRIC

14444



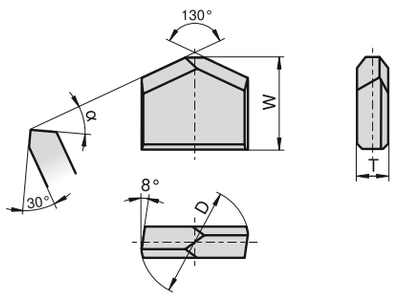

Ø [mm]	D [mm]	Tol. [mm]	W [mm]	Tol. [mm]	T [mm]	Tol. [mm]	α
4.0	4.20	+0.10	5.0	+0.20	1.4	-0.10	30°
5.0	5.21	+0.15	5.0	+0.20	1.6	-0.10	30°
5.5	5.71	+0.15	5.3	+0.20	1.8	-0.10	30°
6.0	6.21	+0.15	5.3	+0.20	1.8	-0.10	30°
6.5	6.71	+0.15	5.8	+0.20	1.8	-0.10	30°
7.0	7.21	+0.15	6.0	+0.20	2.0	-0.10	30°
8.0	8.21	+0.15	6.5	+0.30	2.3	-0.10	30°

Codification code example: 14444- 4.0 CTM17-BC

38500

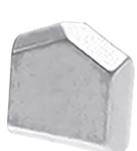

Ø [mm]	D [mm]	Tol. [mm]	W [mm]	Tol. [mm]	T [mm]	Tol. [mm]	α
3.0	3.15	+0.10	3.5	+0.20	0.8	-0.10	30°
3.5	3.65	+0.15	3.5	+0.20	1.2	-0.10	30°
4.5	4.65	+0.15	5.0	+0.20	1.4	-0.10	30°

Codification code example: 38500- 3.0 CTM17-BC

38911



Ø [mm]	D [mm]	Tol. [mm]	W [mm]	Tol. [mm]	T [mm]	Tol. [mm]	α
4.00	4.30	+0.15	5.1	±0.10	1.2	-0.07	20°
5.00	5.20	+0.15	5.1	±0.10	1.4	-0.07	20°
6.00	6.25	+0.15	5.4	±0.10	1.6	-0.07	20°

Codification code example: 38911- 4.0 CTM17-BC

MD_SB_Solutions-for-stone-working_#SALL_#AQU_#V1.indd 34 13.04.2023 14:46:38

Hammer drill tips – METRIC

39742

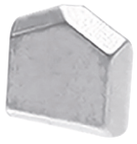

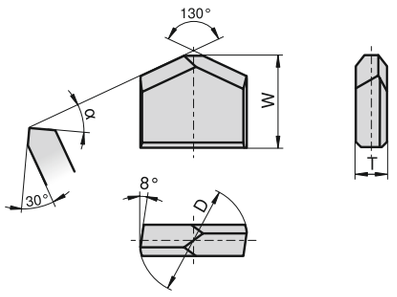

Ø [mm]	D [mm]	Tol. [mm]	W [mm]	Tol. [mm]	T [mm]	Tol. [mm]	α
3.5	3.5	+0.10	4.0	+0.25	0.8	-0.07	20°

Codification code example: 39742- 3.5 CTM17-BC

40429



Ø [mm]	D [mm]	Tol. [mm]	W [mm]	Tol. [mm]	T [mm]	Tol. [mm]	α
3.5	3.5	+0.10	3.5	+0.20	1.2	-0.10	30°

Codification code example: 40429- 3.5 CTM17-BC

MD_SB_Solutions-for-stone-working_#SALL_#AQU_#V1.indd 35 13.04.2023 14:46:38

Masonry drill tips

Schlagbohrerplatten

Plaquettes pour mèche maconnerie

Placchette per punte a forare

Puntas de brocas para hormigon

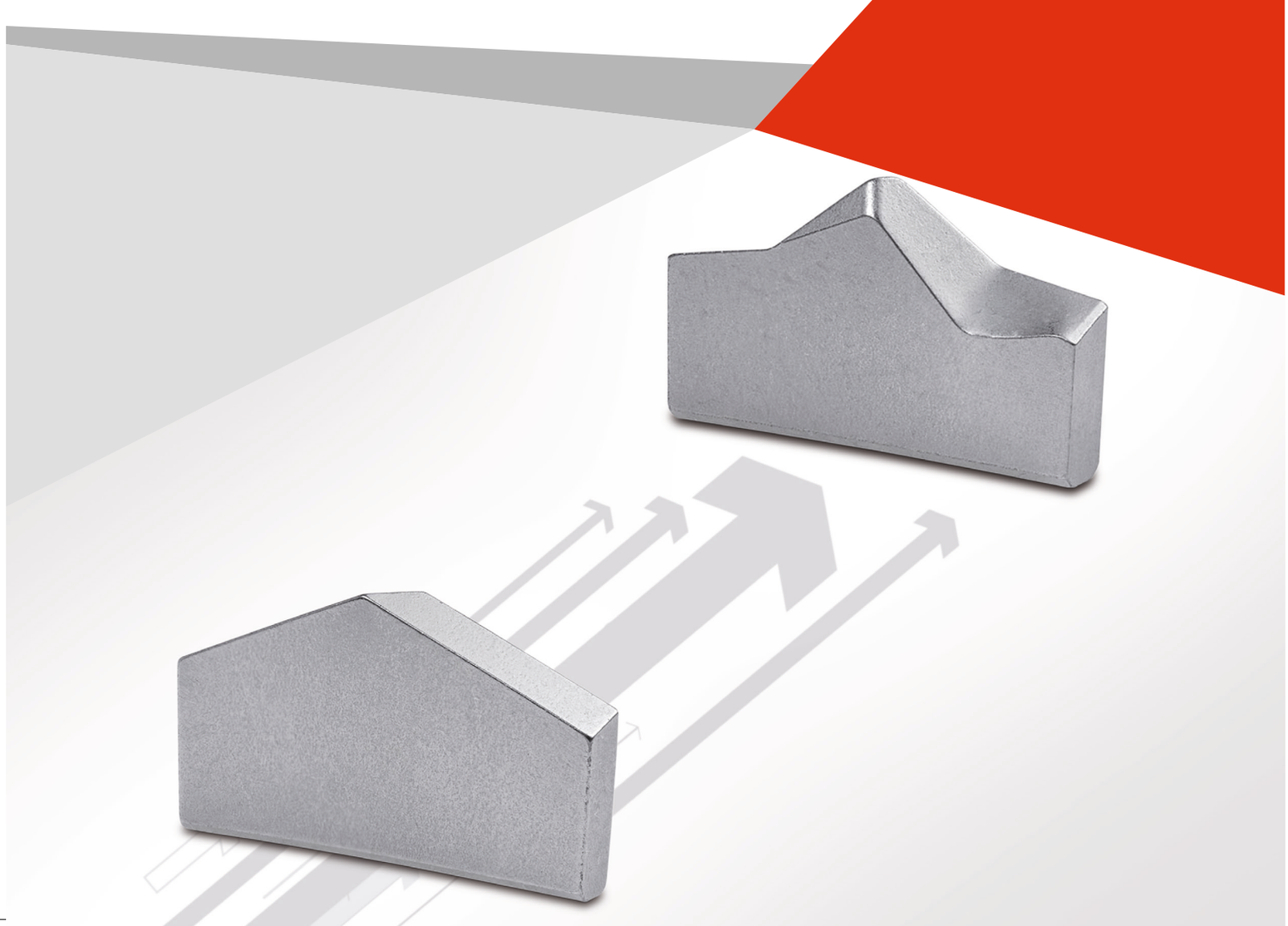

Index

Grades	Page
Composition and properties	38
Applications	39
CERATIZIT Style 58000	40

Premium Masonry Drill Tips	Style	Range Ø	Specificity	PGM Conformity	Page
58000	METRIC (Ø mm)	4 – 20		✓	41
58800	ANSI (Ø inch)	1/8″ – 1″			42

Robust Masonry Drill Tips	Style	Range Ø	Specificity	PGM Conformity	Page
11400	METRIC (Ø mm)	3 – 35	130°	✓	43
46973	ANSI (Ø inch)	1/8″ – 1″	130°		44
32222	METRIC (Ø mm)	3 – 10	Variant T		45
37071	METRIC (Ø mm)	3.4 – 3.5	130°		46

Speed Masonry Drill Tips	Style	Range Ø	Specificity	PGM Conformity	Page
12500	METRIC (Ø mm)	3 – 14	130°	✓	47
22000	ANSI (Ø inch)	1/8″ – 1 1/2″	130°		48–49
16300	METRIC (Ø mm)	12 – 30	130°	✓	50
23500	METRIC (Ø mm)	3 – 20	120°	✓	51

Medium Masonry Drill Tips	Style	Range Ø	Specificity	PGM Conformity	Page
24323	METRIC (Ø mm)	4 – 16	130°	✓	52
43500	METRIC (Ø mm)	3 – 16	118°	✓	53

Eco Masonry Drill Tips	Style	Range Ø	Specificity	PGM Conformity	Page
16000	METRIC (Ø mm)	12 – 30	11400 Reduced T	✓	54
28500	ANSI (Ø inch)	1/8″ – 1 1/2″	22000 Reduced W		55
46716	METRIC (Ø mm)	6 – 10	Reduced T & W		56

Accu Masonry Drill Tips	Style	Range Ø	Specificity	PGM Conformity	Page
50210	METRIC (Ø mm)	4 – 25	110°	✓	57

MD_SB_Solutions-for-stone-working_#SALL_#AQU_#V1.indd 37 13.04.2023 14:46:39

Grades for stone working – composition and properties

Most popular grades MASONARY

CERATIZIT grade code	ISO code	Grain	%Co	HV10	TRS
CTF12-BC	BC05	F	6.0	1640	2200

Most popular grades HAMMER

HAMMER	CERATIZIT grade code	ISO code	Grain	%Co	HV10	TRS
Small Diameter	CTM17-BC	BC20	M	8.5	1420	2900
Large Diameter	CTM17-BC	BC20	M	8.5	1420	2800

Classification of the WC grain size

Average grain size [µm]	Classification	CERATIZIT code
< 0.2	nano	N
0.2 – < 0.5	ultrafine	U
0.5 – < 0.8	submicron	S
0.8 – < 1.3	fine	F
1.3 – < 2.5	medium	M
2.5 – < 6.0	coarse	C
> 6.0	extra-coarse	E

MD_SB_Solutions-for-stone-working_#SALL_#AQU_#V1.indd 38 13.04.2023 14:46:40

Applications

Type, description	METRIC	ANSI	PGM	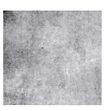 Concrete	 Stone	 Bricks	 Granit & Marble	 Roofing tile	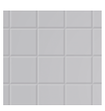 Tiles	 Metal	 Wood
58000	✓		✓	●	●	●	●	●			
58800		✓		●	●	●	●	●			
11400	✓		✓	●	●	●		○			
46973		✓		●	●	●		○			
32222	✓			○		●	●	●	●	●	●
37071	✓			●	●	●					
12500	✓		✓	○	●	●	●	●	●	●	●
22000		✓		○	●	●	●	●	●	●	●
16300	✓		✓	○	●	●	●	●	●	●	●
23500	✓		✓	○	●	●	●	●	●	●	●
24323	✓		✓	●	●	●		○	○		
43500	✓		✓	○	●	●	●	●	●	●	●
16000	✓		✓	●	●	●		○	○		
28500		✓		○		●	●	●	●	●	●
46716	✓			○		●	●	●	●	●	●
50210	✓		✓	●		●		○	○		

● Optimum
○ Not optimum

MD_SB_Solutions-for-stone-working_#SALL_#AQU_#V1.indd 39 13.04.2023 14:46:40

CERATIZIT Style 58000

Advantages of Style 58000

▲ Optimised CERATIZIT grade CTF12-BC with a hardness of 1640 HV10
▲ Especially well suited for cordless drills

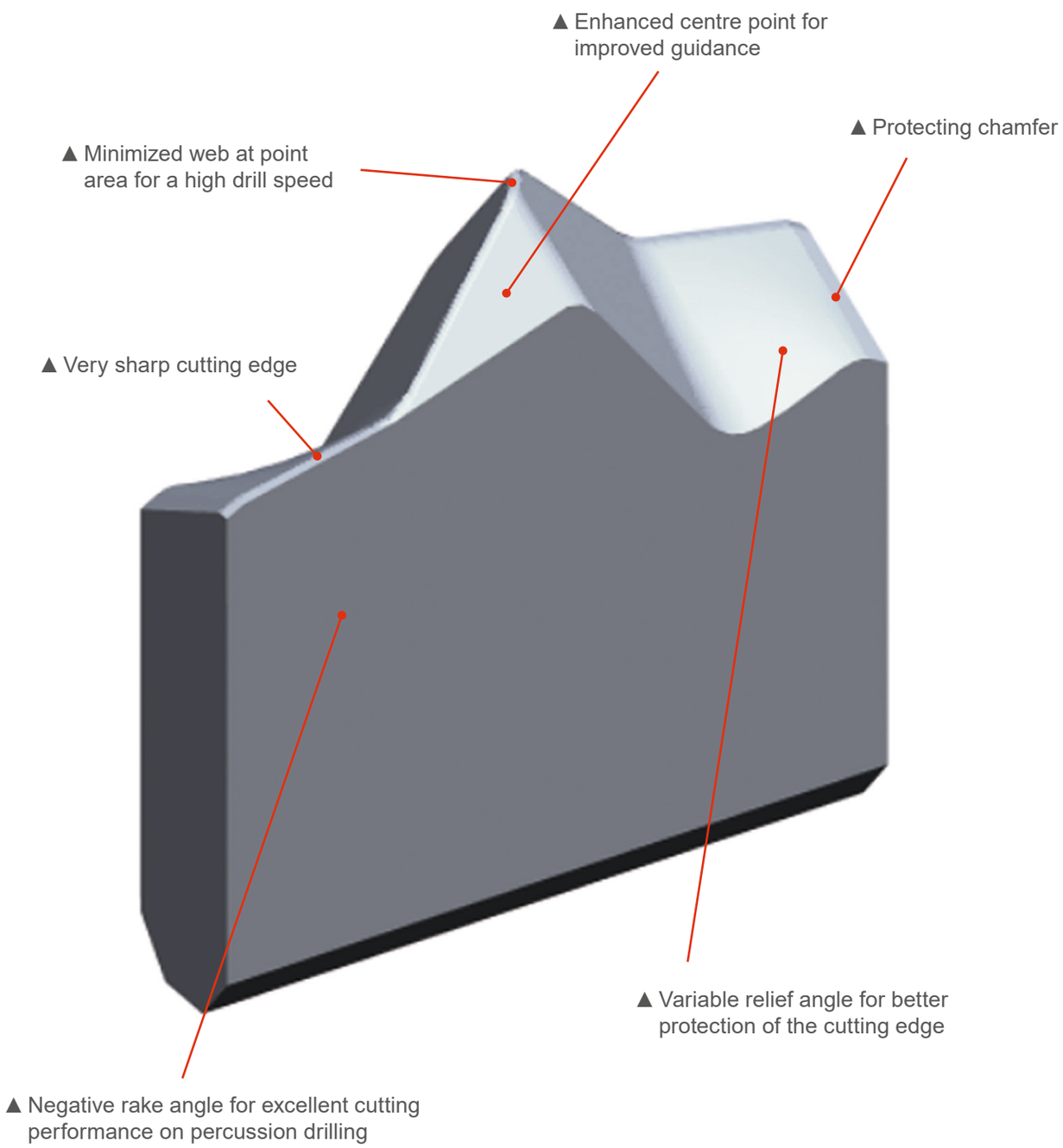

MD_SB_Solutions-for-stone-working_#SALL_#AQU_#V1.indd 40 13.04.2023 14:46:41

Masonry drill tips – METRIC

58000



Conforming to PGM

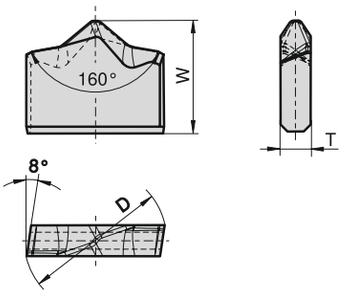

Ø [mm]	D [mm]	Tol. [mm]	W [mm]	Tol. [mm]	T [mm]	Tol. [mm]
4.0	4.18	+0.12	3.30	±0.10	1.00	-0.07
5.0	5.18	+0.12	4.15	±0.10	1.20	-0.07
5.5	5.68	+0.12	4.55	±0.10	1.20	-0.07
6.0	6.18	+0.12	4.95	±0.10	1.40	-0.10
6.5	6.68	+0.12	5.35	±0.10	1.40	-0.10
7.0	7.21	+0.15	5.75	±0.10	1.60	-0.10
8.0	8.21	+0.15	5.80	±0.15	1.80	-0.10
9.0	9.21	+0.15	6.50	±0.15	2.00	-0.10
10.0	10.21	+0.15	7.20	±0.15	2.20	-0.15
12.0	12.23	+0.20	8.60	±0.15	2.50	-0.15
13.0	13.23	+0.20	9.30	±0.15	2.50	-0.15
14.0	14.23	+0.20	10.00	±0.15	2.80	-0.18
16.0	16.23	+0.20	9.95	±0.25	2.80	-0.18
18.0	18.23	+0.20	11.15	±0.25	2.80	-0.18
20.0	20.24	+0.28	12.40	±0.25	3.00	-0.18

Codification code example: 58000- 4.0 CTF12-BC

MD_SB_Solutions-for-stone-working_#SALL_#AQU_#V1.indd 41 13.04.2023 14:46:41

Masonry drill tips – ANSI

58800



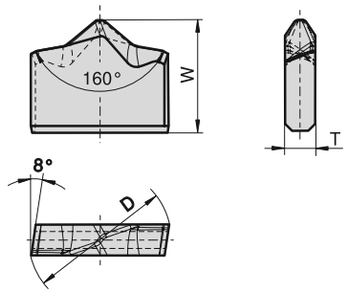

Ø [mm]	D [mm]	Tol. [mm]	W [mm]	Tol. [mm]	T [mm]	Tol. [mm]
1/8″	3.55	-0.15	2.70	±0.125	0.89	-0.07
5/32″	4.30	-0.12	3.30	±0.10	1.00	-0.07
3/16″	5.23	-0.20	4.00	±0.125	1.15	-0.07
7/32″	5.80	-0.12	4.55	±0.10	1.55	-0.07
1/4″	6.80	-0.20	5.30	±0.125	1.52	-0.07
5/16″	8.36	-0.15	5.80	±0.15	1.80	-0.10
3/8″	10.10	-0.20	6.85	±0.125	1.98	-0.07
7/16″	11.88	-0.25	8.05	±0.19	1.98	-0.07
5/8″	16.76	-0.25	9.90	±0.19	2.50	-0.15
3/4″	19.98	-0.30	11.80	±0.19	3.20	-0.18
7/8″	23.14	-0.30	13.20	±0.19	3.41	-0.12
1″	26.46	-0.30	14.40	±0.19	3.50	-0.18

Codification code example: 58800- 1/8″ CTF12-BC

MD_SB_Solutions-for-stone-working_#SALL_#AQU_#V1.indd 42 13.04.2023 14:46:41

Masonry drill tips – METRIC

11400

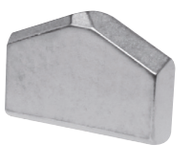

Conforming to PGM

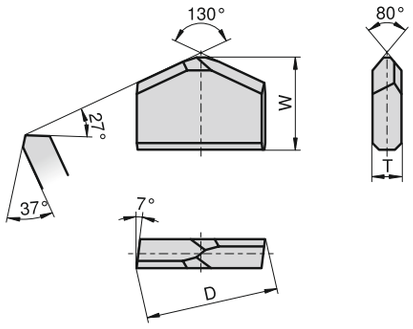

Ø [mm]	D [mm]	Tol. [mm]	W [mm]	Tol. [mm]	T [mm]	Tol. [mm]
3.0	3.0	+0.25 / +0.15	3.20	+0.20	0.8	-0.07
4.0	4.0	+0.30 / +0.18	3.20	+0.20	1.0	-0.07
4.5	4.5	+0.30 / +0.18	3.60	+0.20	1.0	-0.07
5.0	5.0	+0.30 / +0.18	4.00	+0.20	1.2	-0.07
5.5	5.5	+0.30 / +0.18	4.40	+0.20	1.2	-0.07
6.0	6.0	+0.30 / +0.18	4.80	+0.20	1.4	-0.10
6.5	6.5	+0.30 / +0.18	5.20	+0.20	1.4	-0.10
7.0	7.0	+0.36 / +0.21	5.60	+0.20	1.6	-0.10
7.5	7.5	+0.36 / +0.21	6.00	+0.30	1.6	-0.10
8.0	8.0	+0.36 / +0.21	5.60	+0.30	1.8	-0.10
9.0	9.0	+0.36 / +0.21	6.30	+0.30	2.0	-0.10
9.5	9.5	+0.36 / +0.21	6.70	+0.30	2.0	-0.10
10.0	10.0	+0.36 / +0.21	6.80	+0.30	2.2	-0.15
11.0	11.0	+0.43 / +0.23	7.70	+0.30	2.2	-0.15
12.0	12.0	+0.43 / +0.23	8.20	+0.30	2.5	-0.15
13.0	13.0	+0.43 / +0.23	8.90	+0.30	2.5	-0.15
14.0	14.0	+0.43 / +0.23	9.50	+0.30	2.8	-0.18
16.0	16.0	+0.43 / +0.23	9.60	+0.50	3.0	-0.18
18.0	18.0	+0.43 / +0.23	10.50	+0.50	3.0	-0.18
20.0	20.0	+0.52 / +0.24	11.65	+0.50	3.5	-0.20
22.0	22.0	+0.52 / +0.24	12.50	+0.50	3.5	-0.20
25.0	25.0	+0.52 / +0.24	13.80	+0.50	4.0	-0.20
28.0	28.0	+0.52 / +0.24	15.00	+0.50	4.5	-0.20
32.0	32.0	+0.52 / +0.24	17.00	+0.50	5.0	-0.20
35.0	35.0	+0.52 / +0.24	18.60	+0.50	5.5	-0.20

Codification code example: 11400- 3.0 CTF12-BC

MD_SB_Solutions-for-stone-working_#SALL_#AQU_#V1.indd 43 13.04.2023 14:46:42

Masonry drill tips – ANSI

46973

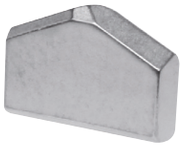

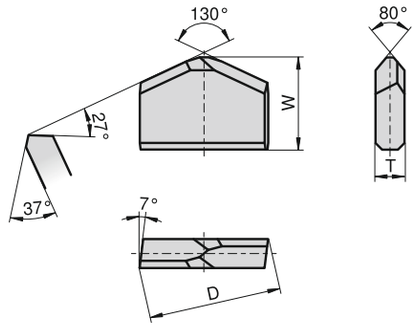

Ø [mm]	D [mm]	Tol. [mm]	W [mm]	Tol. [mm]	T [mm]	Tol. [mm]
1/8″	3.475	±0.075	4.285	±0.125	0.855	±0.035
3/16″	5.130	±0.100	5.125	±0.125	1.115	±0.035
5/16″	8.400	±0.100	6.725	±0.125	1.485	±0.035
3/8″	10.000	±0.100	8.245	±0.125	1.945	±0.035
7/16″	11.755	±0.125	9.710	±0.190	1.945	±0.035
5/8″	16.635	±0.125	13.140	±0.190	2.260	±0.050
3/4″	19.830	±0.150	15.370	±0.190	2.260	±0.050
7/8″	23.140	±0.150	16.700	±0.190	2.260	±0.050
1″	26.310	±0.150	18.420	±0.190	3.030	±0.050

Codification code example: 46973- 1/8″ CTF12-BC

MD_SB_Solutions-for-stone-working_#SALL_#AQU_#V1.indd 44 13.04.2023 14:46:42

Masonry drill tips – METRIC

32222

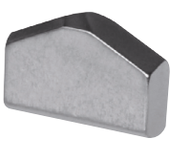

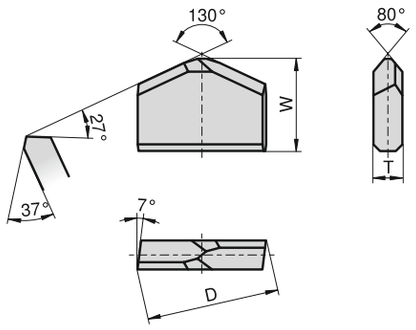

Ø [mm]	D [mm]	Tol. [mm]	W [mm]	Tol. [mm]	T [mm]	Tol. [mm]
3.0	3.0	+0.25 / +0.15	3.50	+0.20	0.80	-0.07
4.0	4.0	+0.30 / +0.18	3.30	+0.20	1.00	-0.07
5.0	5.0	+0.30 / +0.18	4.20	+0.20	1.20	-0.07
6.0	6.0	+0.30 / +0.18	4.70	+0.20	1.40	-0.10
6.5	6.5	+0.30 / +0.18	4.85	+0.20	1.40	-0.10
7.0	7.0	+0.36 / +0.21	5.15	+0.20	1.60	-0.10
8.0	8.0	+0.36 / +0.21	5.65	+0.30	1.80	-0.10
10.0	10.0	+0.36 / +0.21	6.55	+0.30	2.20	-0.15

Codification code example: 32222- 3.0 CTF12-BC

MD_SB_Solutions-for-stone-working_#SALL_#AQU_#V1.indd 45 13.04.2023 14:46:42

Masonry drill tips – METRIC

37071



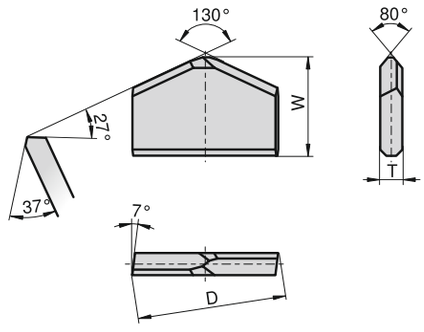

Ø [mm]	D [mm]	Tol. [mm]	W [mm]	Tol. [mm]	T [mm]	Tol. [mm]	α	β	γ
3.4	3.40	+0.15 / +0.05	4.16	+0.25	0.89	-0.07	20°	30°	9°
3.5	3.50	+0 / +0.20	4.20	+0.25	1.00	-0.10	20°	30°	9°

Codification code example: 37071- 3.40 CTF12-BC

MD_SB_Solutions-for-stone-working_#SALL_#AQU_#V1.indd 46 13.04.2023 14:46:42

Masonry drill tips – METRIC

12500



Conforming to PGM

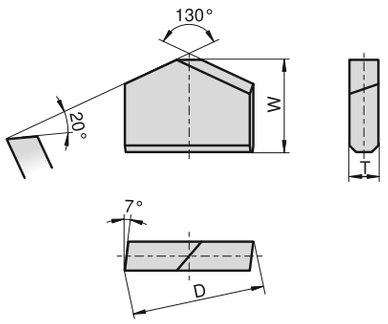

Ø [mm]	D [mm]	Tol. [mm]	W [mm]	Tol. [mm]	T [mm]	Tol. [mm]
3.0	3.0	+0.25 / +0.15	3.2	+0.20	0.8	-0.07
3.5	3.5	+0.25 / +0.15	3.6	+0.20	1.0	-0.07
4.0	4.0	+0.30 / +0.18	3.2	+0.20	1.0	-0.07
4.5	4.5	+0.30 / +0.18	3.6	+0.20	1.0	-0.07
5.0	5.0	+0.30 / +0.18	4.0	+0.20	1.2	-0.07
5.5	5.5	+0.30 / +0.18	4.4	+0.20	1.2	-0.07
6.0	6.0	+0.30 / +0.18	4.8	+0.20	1.4	-0.10
6.5	6.5	+0.30 / +0.18	5.2	+0.20	1.4	-0.10
7.0	7.0	+0.36 / +0.21	5.6	+0.20	1.6	-0.10
7.5	7.5	+0.36 / +0.21	6.0	+0.20	1.6	-0.10
8.0	8.0	+0.36 / +0.21	5.6	+0.30	1.8	-0.10
9.0	9.0	+0.36 / +0.21	6.3	+0.30	2.0	-0.10
9.5	9.5	+0.36 / +0.21	6.7	+0.30	2.0	-0.10
10.0	10.0	+0.36 / +0.21	6.7	+0.30	2.2	-0.15
11.0	11.0	+0.43 / +0.23	7.7	+0.30	2.2	-0.15
12.0	12.0	+0.43 / +0.23	8.2	+0.30	2.5	-0.15
13.0	13.0	+0.43 / +0.23	8.7	+0.30	2.5	-0.15
14.0	14.0	+0.43 / +0.23	9.3	+0.30	2.8	-0.18

Codification code example: 12500- 3.0 CTF12-BC

MD_SB_Solutions-for-stone-working_#SALL_#AQU_#V1.indd 47 13.04.2023 14:46:43

Masonry drill tips – ANSI

22000 Inch



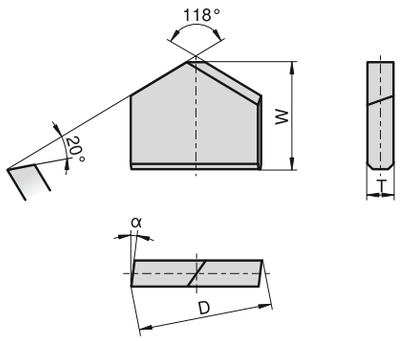

Ø [inch]	ANSI code	D [inch]	Tol. [inch]	W [inch]	Tol. [inch]	T [inch]	Tol. [inch]	α
1/8″	MDG 2	0.140	-0.006	0.164	+0.010	0.035	-0.003	9°
5/32″	MDG 2.5	0.171	-0.006	0.180	+0.010	0.035	-0.003	9°
3/16″	MDG 3	0.206	-0.008	0.197	+0.010	0.045	-0.003	8°
7/32″	MDG 3.5	0.237	-0.008	0.220	+0.010	0.045	-0.003	8°
1/4″	MDG 4	0.268	-0.008	0.220	+0.010	0.060	-0.003	8°
9/32″	MDG 4.5	0.304	-0.008	0.260	+0.010	0.060	-0.003	7°
5/16″	MDG 5	0.335	-0.008	0.260	+0.010	0.060	-0.003	7°
3/8″	MDG 6	0.398	-0.008	0.320	+0.010	0.078	-0.003	7°
7/16″	MDG 7	0.468	-0.010	0.375	+0.015	0.078	-0.003	7°
1/2″	MDG 8	0.530	-0.010	0.430	+0.015	0.091	-0.004	7°
9/16″	MDG 9	0.592	-0.010	0.472	+0.015	0.091	-0.004	7°
5/8″	MDG 10	0.660	-0.010	0.510	+0.015	0.091	-0.004	7°
3/4″	MDG 12	0.787	-0.012	0.598	+0.015	0.091	-0.004	7°
7/8″	MDG 14	0.917	-0.012	0.650	+0.015	0.091	-0.004	7°
1″	MDG 16	1.042	-0.012	0.718	+0.015	0.122	-0.005	7°
1 1/8″	MDG 18	1.175	-0.018	0.758	+0.020	0.122	-0.008	7°
1 1/4″	MDG 20	1.300	-0.018	0.758	+0.020	0.122	-0.008	7°
1 3/8″	MDG 22	1.425	-0.018	0.843	+0.020	0.122	-0.008	7°
1 1/2″	MDG 24	1.550	-0.018	0.843	+0.020	0.122	-0.008	7°

Codification code example: 22000- 1/8″ CTF12-BC

MD_SB_Solutions-for-stone-working_#SALL_#AQU_#V1.indd 48 13.04.2023 14:46:43

Masonry drill tips – ANSI

22000



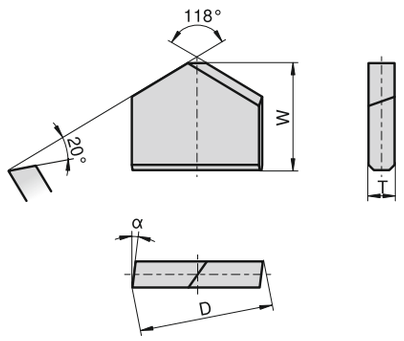

Ø [inch]	ANSI code	D [mm]	Tol. [mm]	W [mm]	Tol. [mm]	T [mm]	Tol. [mm]	α
1/8″	MDG 2	3.55	-0.15	4.16	+0.25	0.89	-0.07	9°
5/32″	MDG 2.5	4.34	-0.15	4.57	+0.25	0.89	-0.07	9°
3/16″	MDG 3	5.23	-0.20	5.00	+0.25	1.15	-0.07	8°
7/32″	MDG 3.5	6.01	-0.20	5.58	+0.25	1.15	-0.07	8°
1/4″	MDG 4	6.80	-0.20	5.58	+0.25	1.52	-0.07	8°
9/32″	MDG 4.5	7.72	-0.20	6.60	+0.25	1.52	-0.07	7°
5/16″	MDG 5	8.50	-0.20	6.60	+0.25	1.52	-0.07	7°
3/8″	MDG 6	10.10	-0.20	8.12	+0.25	1.98	-0.07	7°
7/16″	MDG 7	11.88	-0.25	9.52	+0.38	1.98	-0.07	7°
1/2″	MDG 8	13.46	-0.25	10.92	+0.38	2.31	-0.10	7°
9/16″	MDG 9	15.03	-0.25	11.98	+0.38	2.31	-0.10	7°
5/8″	MDG 10	16.76	-0.25	12.95	+0.38	2.31	-0.10	7°
3/4″	MDG 12	19.98	-0.30	15.18	+0.38	2.31	-0.10	7°
7/8″	MDG 14	23.29	-0.30	16.51	+0.38	2.31	-0.10	7°
1″	MDG 16	26.46	-0.30	18.23	+0.38	3.09	-0.12	7°
1 1/8″	MDG 18	29.84	-0.45	19.25	+0.50	3.09	-0.20	7°
1 1/4″	MDG 20	33.02	-0.45	19.25	+0.50	3.09	-0.20	7°
1 3/8″	MDG 22	36.19	-0.45	21.41	+0.50	3.09	-0.20	7°
1 1/2″	MDG 24	39.37	-0.45	21.41	+0.50	3.09	-0.20	7°

Codification code example: 22000- 1/8″ CTF12-BC

MD_SB_Solutions-for-stone-working_#SALL_#AQU_#V1.indd 49 13.04.2023 14:46:43

Masonry drill tips – METRIC

16300

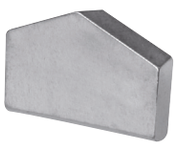

Conforming to PGM

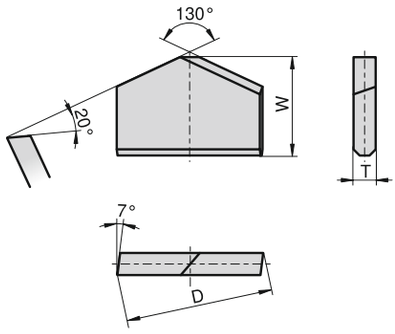

Ø [mm]	D [mm]	Tol. [mm]	W [mm]	Tol. [mm]	T [mm]	Tol. [mm]
12.0	12.0	+0.43 / +0.23	8.0	+0.30	1.8	-0.15
13.0	13.0	+0.43 / +0.23	8.7	+0.30	2.0	-0.15
14.0	14.0	+0.43 / +0.23	9.3	+0.30	2.1	-0.18
15.0	15.0	+0.43 / +0.23	9.6	+0.30	2.2	-0.18
16.0	16.0	+0.43 / +0.23	9.6	+0.50	2.2	-0.18
17.0	17.0	+0.43 / +0.23	10.5	+0.50	2.2	-0.18
18.0	18.0	+0.43 / +0.23	10.5	+0.50	2.2	-0.18
19.0	19.0	+0.43 / +0.23	11.5	+0.50	2.5	-0.18
20.0	20.0	+0.52 / +0.24	11.5	+0.50	2.5	-0.20
22.0	22.0	+0.52 / +0.24	12.5	+0.50	2.5	-0.20
24.0	24.0	+0.52 / +0.24	15.0	+0.50	3.0	-0.20
25.0	25.0	+0.52 / +0.24	15.0	+0.50	3.0	-0.20
26.0	26.0	+0.52 / +0.24	15.0	+0.50	3.0	-0.20
30.0	30.0	+0.52 / +0.24	16.0	+0.50	4.0	-0.20

Codification code example: 16300- 12.0 CTM17-BC

MD_SB_Solutions-for-stone-working_#SALL_#AQU_#V1.indd 50 13.04.2023 14:46:44

Masonry drill tips – METRIC

23500



Conforming to PGM

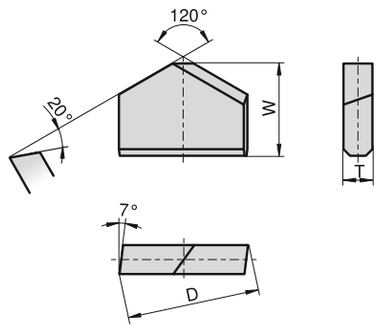

Ø [mm]	D [mm]	Tol. [mm]	W [mm]	Tol. [mm]	T [mm]	Tol. [mm]
3.0	3.0	+0.25 / +0.15	3.2	+0.20	0.8	-0.07
3.5	3.5	+0.25 / +0.15	3.6	+0.20	1.0	-0.07
4.0	4.0	+0.30 / +0.18	3.2	+0.20	1.0	-0.07
4.5	4.5	+0.30 / +0.18	3.6	+0.20	1.0	-0.07
5.0	5.0	+0.30 / +0.18	4.0	+0.20	1.2	-0.07
5.5	5.5	+0.30 / +0.18	4.4	+0.20	1.2	-0.07
6.0	6.0	+0.30 / +0.18	4.8	+0.20	1.4	-0.10
6.5	6.5	+0.30 / +0.18	5.2	+0.20	1.4	-0.10
7.0	7.0	+0.36 / +0.21	5.6	+0.20	1.6	-0.10
8.0	8.0	+0.36 / +0.21	5.6	+0.30	1.8	-0.10
9.0	9.0	+0.36 / +0.21	6.3	+0.30	2.0	-0.10
10.0	10.0	+0.36 / +0.21	7.0	+0.30	2.2	-0.15
11.0	11.0	+0.43 / +0.23	7.7	+0.30	2.2	-0.15
12.0	12.0	+0.43 / +0.23	8.4	+0.30	2.5	-0.15
13.0	13.0	+0.43 / +0.23	9.1	+0.30	2.5	-0.15
14.0	14.0	+0.43 / +0.23	9.3	+0.30	2.8	-0.18
16.0	16.0	+0.43 / +0.23	9.6	+0.50	3.0	-0.18
18.0	18.0	+0.43 / +0.23	10.50	+0.50	3.0	-0.18
20.0	20.0	+0.52 / +0.25	11.50	+0.50	3.5	-0.20

Codification code example: 23500- 3.0 CTF12-BC

MD_SB_Solutions-for-stone-working_#SALL_#AQU_#V1.indd 51 13.04.2023 14:46:44

Masonry drill tips – METRIC

24323

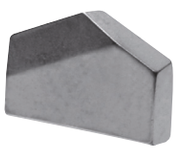

Conforming to PGM

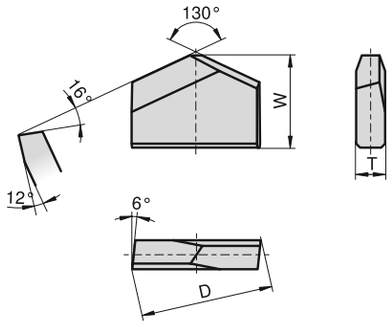

Ø [mm]	D [mm]	Tol. [mm]	W [mm]	Tol. [mm]	T [mm]	Tol. [mm]
4.0	4.0	+0.30 / +0.18	3.2	+0.20	1.0	-0.07
5.0	5.0	+0.30 / +0.18	4.0	+0.20	1.2	-0.07
5.5	5.5	+0.30 / +0.18	4.4	+0.20	1.2	-0.07
6.0	6.0	+0.30 / +0.18	4.8	+0.20	1.4	-0.10
6.5	6.5	+0.36 / +0.21	5.2	+0.20	1.4	-0.10
7.0	7.0	+0.36 / +0.21	5.6	+0.20	1.6	-0.10
8.0	8.0	+0.36 / +0.21	5.6	+0.30	1.8	-0.10
9.0	9.0	+0.36 / +0.21	6.3	+0.30	2.0	-0.10
10.0	10.0	+0.36 / +0.21	7.0	+0.30	2.2	-0.15
12.0	12.0	+0.43 / +0.23	8.4	+0.30	2.5	-0.15
14.0	14.0	+0.43 / +0.23	9.75	+0.30	2.8	-0.18
16.0	16.0	+0.43 / +0.23	9.6	+0.50	3.0	-0.18

Codification code example: 24323- 4.0 CTM17-BC

MD_SB_Solutions-for-stone-working_#SALL_#AQU_#V1.indd 52 13.04.2023 14:46:44

Masonry drill tips – METRIC

43500



Conforming to PGM

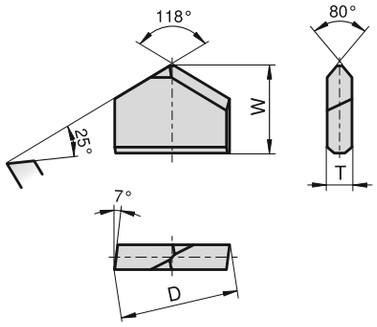

Ø [mm]	D [mm]	Tol. [mm]	W [mm]	Tol. [mm]	T [mm]	Tol. [mm]
3.0	3.0	+0.25 / +0.15	3.2	+0.20	0.8	-0.07
4.0	4.0	+0.30 / +0.18	3.2	+0.20	1.0	-0.07
5.0	5.0	+0.30 / +0.18	4.0	+0.20	1.2	-0.07
5.5	5.5	+0.30 / +0.18	4.4	+0.20	1.2	-0.07
6.0	6.0	+0.30 / +0.18	4.8	+0.20	1.4	-0.10
6.5	6.5	+0.30 / +0.18	5.2	+0.20	1.4	-0.10
7.0	7.0	+0.36 / +0.21	5.6	+0.20	1.6	-0.10
8.0	8.0	+0.36 / +0.21	5.6	+0.30	1.8	-0.10
9.0	9.0	+0.36 / +0.21	6.3	+0.30	2.0	-0.10
10.0	10.0	+0.36 / +0.21	7.0	+0.30	2.2	-0.15
11.0	11.0	+0.43 / +0.23	7.7	+0.30	2.2	-0.15
12.0	12.0	+0.43 / +0.23	8.4	+0.30	2.5	-0.15
14.0	14.0	+0.43 / +0.23	9.8	+0.30	2.1	-0.18
16.0	16.0	+0.43 / +0.23	9.8	+0.50	2.2	-0.18

Codification code example: 43500- 3.0 CTF12-BC

MD_SB_Solutions-for-stone-working_#SALL_#AQU_#V1.indd 53 13.04.2023 14:46:45

Masonry drill tips – METRIC

16000

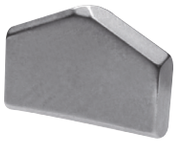

Conforming to PGM

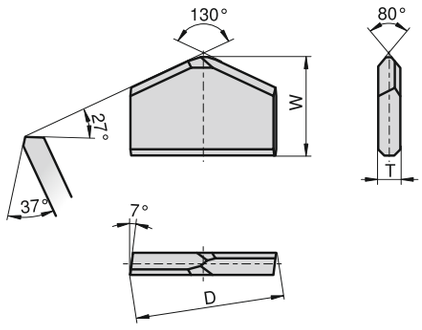

Ø [mm]	D [mm]	Tol. [mm]	W [mm]	Tol. [mm]	T [mm]	Tol. [mm]	α	β	γ
12.0	12.0	+0.43 / +0.23	8.2	+0.30	1.8	-0.15	27°	37°	7°
13.0	13.0	+0.43 / +0.23	8.7	+0.30	2.0	-0.15	27°	37°	7°
14.0	14.0	+0.43 / +0.23	9.3	+0.30	2.1	-0.18	27°	37°	7°
15.0	15.0	+0.43 / +0.23	9.6	+0.30	2.2	-0.18	27°	37°	7°
16.0	16.0	+0.43 / +0.23	9.6	+0.50	2.2	-0.18	27°	37°	7°
17.0	17.0	+0.43 / +0.23	10.5	+0.50	2.2	-0.18	27°	37°	7°
18.0	18.0	+0.43 / +0.23	10.5	+0.50	2.2	-0.18	27°	37°	7°
19.0	19.0	+0.43 / +0.23	11.5	+0.50	2.5	-0.18	27°	37°	7°
20.0	20.0	+0.52 / +0.24	11.5	+0.50	2.5	-0.20	27°	37°	7°
22.0	22.0	+0.52 / +0.24	12.5	+0.50	2.5	-0.20	27°	37°	7°
24.0	24.0	+0.52 / +0.24	15.0	+0.50	3.0	-0.20	27°	37°	7°
25.0	25.0	+0.52 / +0.24	15.0	+0.50	3.0	-0.20	27°	37°	7°
26.0	26.0	+0.52 / +0.24	15.0	+0.50	3.0	-0.20	27°	37°	7°
28.0	28.0	+0.52 / +0.24	15.0	+0.50	4.0	-0.20	27°	37°	7°
30.0	30.0	+0.52 / +0.24	16.0	+0.50	4.0	-0.20	27°	37°	7°

Codification code example: 16000- 12.0 CTM17-BC

MD_SB_Solutions-for-stone-working_#SALL_#AQU_#V1.indd 54 13.04.2023 14:46:45

Masonry drill tips – ANSI

28500 Inch

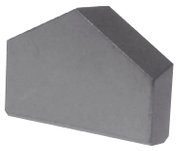

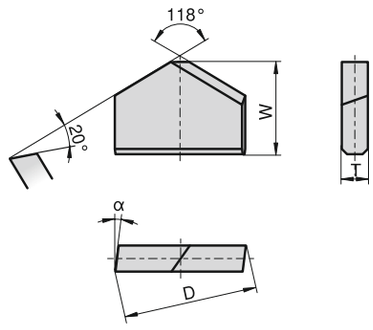

Ø [inch]	D [inch]	Tol. [inch]	W [inch]	Tol. [inch]	T [inch]	Tol. [inch]	α
1/8″	0.140	-0.006	0.138	+0.010	0.035	-0.003	9°
5/32″	0.171	-0.006	0.158	+0.010	0.035	-0.003	9°
3/16″	0.206	-0.008	0.177	+0.010	0.045	-0.003	8°
1/4″	0.268	-0.008	0.197	+0.010	0.060	-0.003	8°
5/16″	0.335	-0.008	0.236	+0.010	0.060	-0.003	7°
3/8″	0.398	-0.008	0.276	+0.010	0.078	-0.003	7°
1/2″	0.530	-0.010	0.335	+0.015	0.091	-0.004	7°
5/8″	0.660	-0.010	0.394	+0.015	0.091	-0.004	7°
3/4″	0.787	-0.012	0.473	+0.015	0.091	-0.004	7°
7/8″	0.917	-0.012	0.532	+0.015	0.091	-0.004	7°
1″	1.042	-0.012	0.575	+0.015	0.122	-0.005	7°
1 1/8″	1.175	-0.018	0.630	+0.020	0.122	-0.008	7°
1 1/4″	1.300	-0.018	0.650	+0.020	0.122	-0.008	7°
1 3/8″	1.425	-0.018	0.689	+0.020	0.122	-0.008	7°
1 1/2″	1.550	-0.018	0.709	+0.020	0.122	-0.008	7°

Codification code example: 28500- 1/8″ CTM17-BC

28500

Ø [inch]	D [mm]	Tol. [mm]	W [mm]	Tol. [mm]	T [mm]	Tol. [mm]	α
1/8″	3.55	-0.15	3.5	+0.25	0.89	-0.07	9°
5/32″	4.34	-0.15	4.0	+0.25	0.89	-0.07	9°
3/16″	5.23	-0.20	4.5	+0.25	1.15	-0.07	8°
1/4″	6.80	-0.20	5.0	+0.25	1.52	-0.07	8°
5/16″	8.50	-0.20	6.0	+0.25	1.52	-0.07	7°
3/8″	10.10	-0.20	7.0	+0.25	1.98	-0.07	7°
1/2″	13.46	-0.25	8.5	+0.38	2.31	-0.10	7°
5/8″	16.76	-0.25	10.0	+0.38	2.31	-0.10	7°
3/4″	19.98	-0.30	12.0	+0.38	2.31	-0.10	7°
7/8″	23.29	-0.30	13.5	+0.38	2.31	-0.10	7°
1″	26.46	-0.30	14.6	+0.38	3.09	-0.12	7°
1 1/8″	29.84	-0.45	16.0	+0.50	3.09	-0.20	7°
1 1/4″	33.02	-0.45	16.5	+0.50	3.09	-0.20	7°
1 3/8″	36.19	-0.45	17.5	+0.50	3.09	-0.20	7°
1 1/2″	39.37	-0.45	18.0	+0.50	3.09	-0.20	7°

Codification code example: 28500- 1/8″ CTM17-BC

MD_SB_Solutions-for-stone-working_#SALL_#AQU_#V1.indd 55 13.04.2023 14:46:46

Masonry drill tips – METRIC

46716

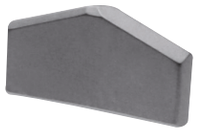

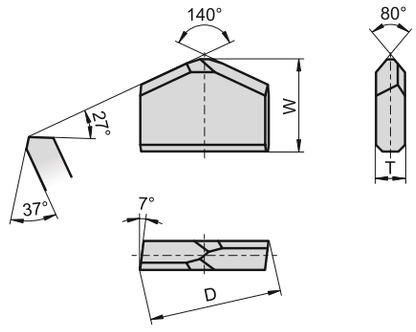

Ø [mm]	D [mm]	Tol. [mm]	W [mm]	Tol. [mm]	T [mm]	Tol. [mm]
6.0	6.240	±0.060	3.90	±0.10	1.050	±0.050
6.5	6.740	±0.060	4.40	±0.10	1.050	±0.050
8.0	8.285	±0.075	5.15	±0.15	1.125	±0.050
10.0	10.285	±0.075	5.55	±0.15	1.325	±0.075

Codification code example: 46716- 6.0 CTM17-BC

MD_SB_Solutions-for-stone-working_#SALL_#AQU_#V1.indd 56 13.04.2023 14:46:46

Masonry drill tips – METRIC

50210



Conforming to PGM®

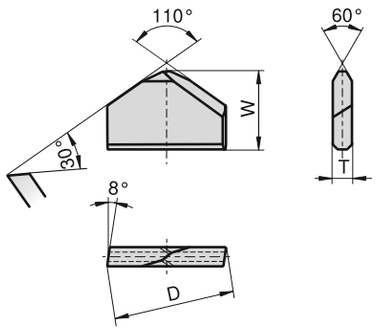

Ø [mm]	D [mm]	Tol. [mm]	W [mm]	Tol. [mm]	T [mm]	Tol. [mm]
4.0	4.0	+0.40 / +0.15	3.40	+0.20	1.0	-0.07
4.5	4.5	+0.40 / +0.15	3.90	+0.20	1.0	-0.07
5.0	5.0	+0.40 / +0.15	4.30	+0.20	1.2	-0.07
5.5	5.5	+0.40 / +0.15	4.70	+0.20	1.2	-0.07
6.0	6.0	+0.40 / +0.15	5.20	+0.20	1.4	-0.10
6.5	6.5	+0.40 / +0.15	5.70	+0.20	1.4	-0.10
7.0	7.0	+0.45 / +0.20	6.10	+0.20	1.6	-0.10
8.0	8.0	+0.45 / +0.20	6.05	+0.30	1.8	-0.10
10.0	10.0	+0.45 / +0.20	7.60	+0.30	2.2	-0.15
12.0	12.0	+0.50 / +0.20	9.35	+0.30	2.0	-0.15
13.0	13.0	+0.50 / +0.20	10.05	+0.30	2.2	-0.15
14.0	14.0	+0.50 / +0.20	10.85	+0.30	2.5	-0.18
16.0	16.0	+0.50 / +0.20	10.90	+0.50	2.5	-0.18
18.0	18.0	+0.50 / +0.20	12.10	+0.50	3.0	-0.18
20.0	20.0	+0.55 / +0.20	13.45	+0.50	3.2	-0.20
22.0	22.0	+0.55 / +0.20	13.70	+0.50	3.5	-0.20
25.0	25.0	+0.55 / +0.20	15.50	+0.50	4.1	-0.20

Codification code example: 50210- 4.0 CTF12-BC

MD_SB_Solutions-for-stone-working_#SALL_#AQU_#V1.indd 57 13.04.2023 14:46:47

Special tips
Sonderplatten
Plaquettes spéciales
Plachette non standard
Puntas especiales

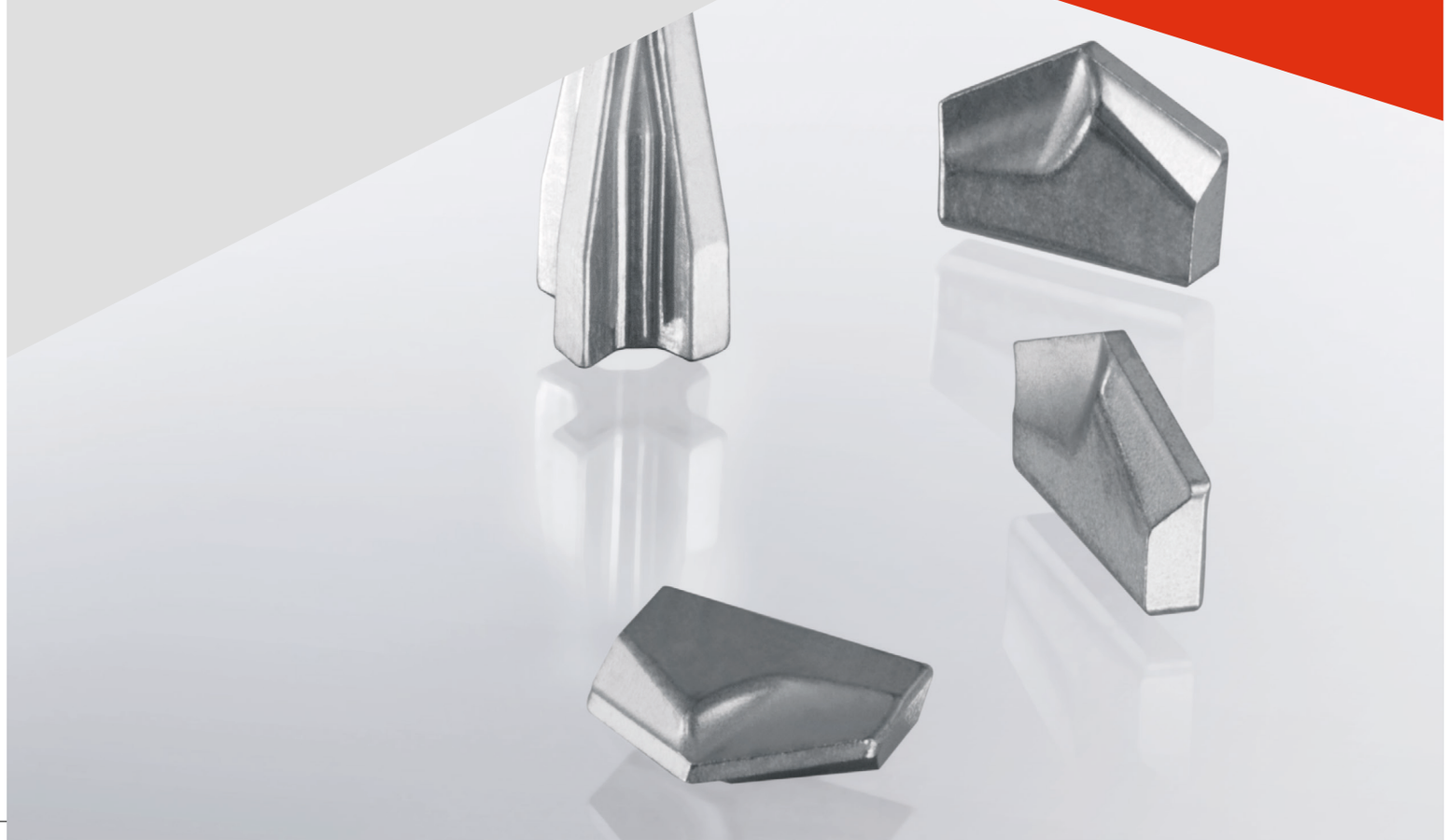

Index

METAL CUTTING TIPS					Page
Applications					60
Metal Cutting Tips	**Style**	**Range Ø**	**PGM Conformity**		**Page**
12500	METRIC (Ø mm)	3 – 8			61
14818	METRIC (Ø mm)	8 – 23			61

GLASS DRILLING TIPS					Page
Applications					62
Glass drilling tips	**Style**	**Range Ø**	**PGM Conformity**		**Page**
17353	METRIC (Ø mm)	3 – 13			63
50278	METRIC (Ø mm)	4 – 10			63

MD_SB_Solutions-for-stone-working_#SALL_#AQU_#V1.indd 59 13.04.2023 14:46:48

Metal cutting tips
Metallbohrerplatten
Plaquettes pour coupe métaux
Plaquette per punte per lavorazione metall
Puntas de broca para metallo

Applications

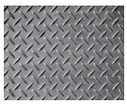

Type, description	METRIC	Metal
12500	✓	○
14818	✓	●

● Optimum
○ Not optimum



MD_SB_Solutions-for-stone-working_#SALL_#AQU_#V1.indd 60 13.04.2023 14:46:49

Metal cutting tips – METRIC

12500



Grade recommendation:
CTS20-BC
CTS18D

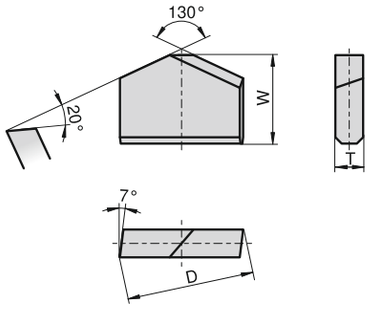

Ø [mm]	D [mm]	Tol. [mm]	W [mm]	Tol. [mm]	T [mm]	Tol. [mm]
3.0	3.0	+0.25 / +0.15	3.2	+0.20	0.8	-0.07
3.5	3.5	+0.25 / +0.15	3.6	+0.20	1.0	-0.07
4.0	4.0	+0.30 / +0.18	3.2	+0.20	1.0	-0.07
4.5	4.5	+0.30 / +0.18	3.6	+0.20	1.0	-0.07
5.0	5.0	+0.30 / +0.18	4.0	+0.20	1.2	-0.07
5.5	5.5	+0.30 / +0.18	4.4	+0.20	1.2	-0.07
6.0	6.0	+0.30 / +0.18	4.8	+0.20	1.4	-0.10
6.5	6.5	+0.30 / +0.18	5.2	+0.20	1.4	-0.10
7.0	7.0	+0.36 / +0.21	5.6	+0.20	1.6	-0.10
7.5	7.5	+0.36 / +0.21	6.0	+0.20	1.6	-0.10
8.0	8.0	+0.36 / +0.21	5.6	+0.30	1.8	-0.10

Codification code example: 12500- 3.0 CTS18-D

14818



Grade recommendation:
CTS20-BC
CTS18D

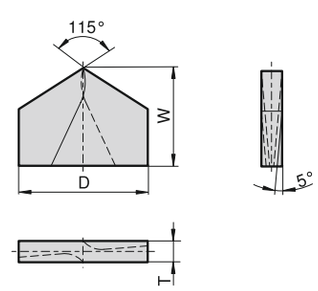

Ø [mm]	D [mm]	Tol. [mm]	W [mm]	T [mm]	Tol. [mm]
8.0	8.5	+0.5	7.1	1.6	-0.15
8.5	9.0	+0.5	8.0	2.0	-0.15
9.0	9.5	+0.5	8.0	2.0	-0.15
9.5	10.0	+0.5	8.5	2.0	-0.15
10.0	10.5	+0.5	8.5	2.0	-0.20
10.5	11.3	+0.5	9.5	2.2	-0.20
11.0	11.8	+0.5	9.5	2.2	-0.20
11.5	12.3	+0.6	10.6	2.5	-0.20
12.0	12.8	+0.6	10.6	2.5	-0.20
13.0	13.8	+0.6	12.5	2.5	-0.20
14.0	14.8	+0.7	12.5	2.5	-0.20
15.0	15.8	+0.7	14.0	2.8	-0.25
16.0	16.8	+0.7	14.0	2.8	-0.25
17.0	17.8	+0.7	16.0	3.0	-0.25
18.0	18.8	+0.7	16.0	3.0	-0.25
19.0	19.8	+0.7	18.0	3.5	-0.30
20.0	20.8	+0.8	18.0	3.5	-0.30
21.0	22.8	+0.8	18.0	3.5	-0.30
22.0	23.0	+0.8	19.0	4.0	-0.30
23.0	24.0	+0.8	19.0	4.0	-0.30

Codification code example: 14818- 8.0 CTS18-D

MD_SB_Solutions-for-stone-working_#SALL_#AQU_#V1.indd 61 13.04.2023 14:46:50

Glass drill tips
Glasbohrerplatten
Plaquettes mèche pour le travail du verre
Placchette per punte per lavorazione vetro
Puntas de broca para vidrio

Applications




Type, description	METRIC	Glass	Tiles
17353	✓	●	●
50278	✓	●	●

● Optimum
○ Not optimum



MD_SB_Solutions-for-stone-working_#SALL_#AQU_#V1.indd 62 13.04.2023 14:46:52

Glass drill tips – METRIC

17353



Grade recommendation:
CHROMIUM GRADE:
CTS06-KC
WC-Cobalt GRADE:
CTF12-BC

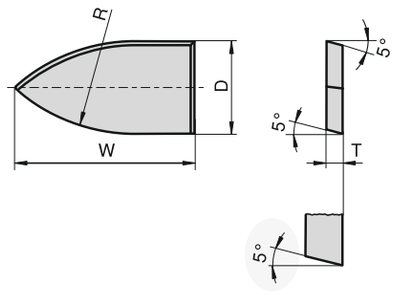

Ø [mm (inch)]	D [mm]	Tol. [mm]	W [mm]	Tol. [mm]	T [mm]	Tol. [mm]	R [mm]
3.0	3.4	-0.20	6.2	±0.20	1.1	-0.10	6
4.0	4.4	-0.20	8.2	±0.20	1.1	-0.10	8
5.0	5.4	-0.20	10.2	±0.20	1.3	-0.10	10
6.0	6.4	-0.20	12.2	±0.20	1.3	-0.10	12
6.5 (1/4″)	6.8	-0.20	12.2	±0.20	1.5	-0.10	13
7.0	7.4	-0.25	14.2	±0.20	1.5	-0.10	14
8.0	8.4	-0.25	16.2	±0.20	1.8	-0.10	16
9.0	9.4	-0.25	18.2	±0.20	1.8	-0.10	18
10.0 (3/8″)	10.4	-0.25	20.2	±0.20	1.8	-0.10	20
12.0	12.4	-0.25	24.2	±0.20	2.3	-0.10	24
13.0 (1/2″)	13.4	-0.30	26.2	±0.20	2.3	-0.10	26

Codification code example: 17353- 3.0 CTF12-BC

50278



Grade recommendation:
CHROMIUM GRADE:
CTS06-KC
WC-Cobalt GRADE:
CTF12-BC

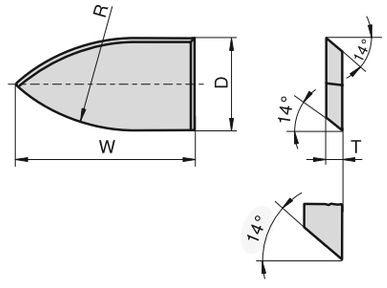

Ø [mm]	D [mm]	Tol. [mm]	W [mm]	Tol. [mm]	T [mm]	Tol. [mm]	R [mm]
4.0	4.4	-0.20	8.2	±0.10	1.1	-0.10	8
5.0	5.4	-0.20	10.2	±0.10	1.3	-0.10	10
6.0	6.4	-0.20	12.2	±0.15	1.3	-0.10	12
8.0	8.4	-0.30	16.2	±0.15	1.8	-0.10	16
10.0	10.4	-0.30	20.2	±0.20	1.8	-0.10	20

Codification code example: 50278- 4.0 CTF12-BC

MD_SB_Solutions-for-stone-working_#SALL_#AQU_#V1.indd 63 13.04.2023 14:46:53

Core drill tips
Bohrkronenplatten
Plaquettes pour trépan
Placchette per punte a corona
Plaquitas para trepano



Index

Grades	Page
Composition and properties	66

Standard Core Drill Tips	Style	Range Ø	PGM Conformity		Page
12083	METRIC (Ø mm)	9.0 x 4.5 x 3.0			67
12641	METRIC (Ø mm)	9.0 x 6.5 x 4.0 10.0 x 6.5 x 4.0			67
13326	METRIC (Ø mm)	9.0 x 5.5 x 3.5			67
14420	METRIC (Ø mm)	10.0 x 5.0 x 3.5			67

With chamfer	Style	Range Ø	PGM Conformity		Page
14157	METRIC (Ø mm)	12.0 x 7.0 x 4.0			68
23985	METRIC (Ø mm)	8.0 x 6.6 x 4.1			68
28537	METRIC (Ø mm)	12.5 x 7.2 x 4.1			68
30838	METRIC (Ø mm)	8.1 x 7.1 x 4.1			68

With point	Style	Range Ø	PGM Conformity		Page
16623	METRIC (Ø mm)	8.5 x 6.5 x 3.9			69
39241	METRIC (Ø mm)	8.0 x 4.0 x 3.0 8.0 x 5.5 x 3.6			69
42067	METRIC (Ø mm)	10.3 x 5.0 x 3.0			69
50809	METRIC (Ø mm)	8.0 x 7.2 x 4.0 12.5 x 7.2 x 4.0			69

MD_SB_Solutions-for-stone-working_#SALL_#AQU_#V1.indd 65 13.04.2023 14:46:55

Grades for stone working – composition and properties

WC-Cobalt Grades

CERATIZIT grade code	ISO code	U.S. code	Binder [m %]	Density [g/cm³]	Hardness HV10	Hardness HV30	Hardness HRA	Transverse Rupture Strength [MPa]	Transverse Rupture Strength [P.S.I.]
CTF12-BC	BC05	C2	6.0	14.95	1640	1620	92.1	2200	319.000
CTM17-BC	BC20	C1	8.5	14.65	1420	1400	90.4	2800	406.000

Classification of the WC grain size

Average grain size [µm]	Classification	CERATIZIT code
< 0.2	nano	N
0.2 – < 0.5	ultrafine	U
0.5 – < 0.8	submicron	S
0.8 – < 1.3	fine	F
1.3 – < 2.5	medium	M
2.5 – < 6.0	coarse	C
> 6.0	extra-coarse	E

MD_SB_Solutions-for-stone-working_#SALL_#AQU_#V1.indd 66 13.04.2023 14:46:55

Core drill tips – METRIC

12083



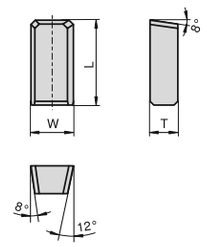

Codification [mm]	L [mm]	Tol. [mm]	W [mm]	Tol. [mm]	T [mm]	Tol. [mm]
9.0 x 4.5 x 3.0	9.0	±0.10	4.5	±0.05	3.0	-0.10

Codification code example: 12083- 9.0x4.5x3.0 CTM17-BC

12641



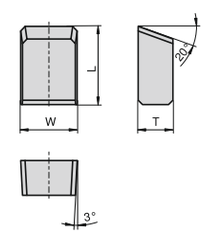

Codification [mm]	L [mm]	Tol. [mm]	W [mm]	Tol. [mm]	T [mm]	Tol. [mm]
9.0 x 6.5 x 4.0	9.0	±0.10	6.5	±0.07	4.0	±0.05
10.0 x 6.5 x 4.0	10.0	±0.10	6.5	±0.07	4.0	±0.05

Codification code example: 12641- 9.0x6.5x4.0 CTM17-BC

13326



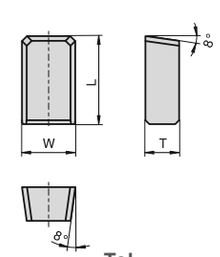

Codification [mm]	L [mm]	Tol. [mm]	W [mm]	Tol. [mm]	T [mm]	Tol. [mm]
9.0 x 5.5 x 3.5	9.0	±0.10	5.5	-0.10	3.5	-0.10

Codification code example: 13326- 9.0x5.5x3.5 CTM17-BC

14420



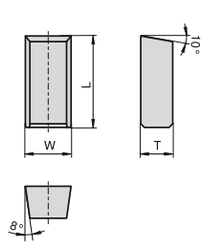

Codification [mm]	L [mm]	Tol. [mm]	W [mm]	Tol. [mm]	T [mm]	Tol. [mm]
10.0 x 5.0 x 3.5	10.0	±0.10	5.0	±0.10	3.5	±0.15

Codification code example: 14420- 10.0x5.0x3.5 CTM17-BC

MD_SB_Solutions-for-stone-working_#SALL_#AQU_#V1.indd 67 13.04.2023 14:46:56

Core drill tips – METRIC

14157



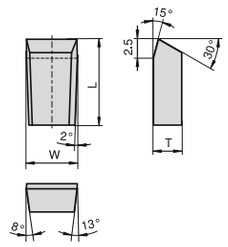

Codification [mm]	L [mm]	Tol. [mm]	W [mm]	Tol. [mm]	T [mm]	Tol. [mm]
12.0 x 7.0 x 4.0	12.0	±0.10	7.0	+0.20	4.0	-0.10

Codification code example: 14157- 12.0x7.0x4.0 CTF12-BC

23985

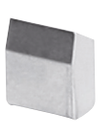

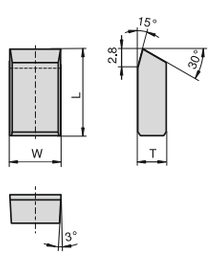

Codification [mm]	L [mm]	Tol. [mm]	W [mm]	Tol. [mm]	T [mm]	Tol. [mm]
8.0 x 6.6 x 4.1	8.0	±0.10	6.6	±0.10	4.15	-0.15

Codification code example: 23985- 8.0x6.6x4.1 CTF12-BC

28537



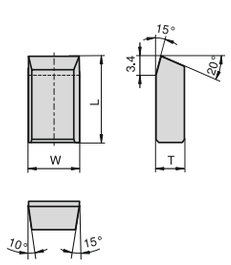

Codification [mm]	L [mm]	Tol. [mm]	W [mm]	Tol. [mm]	T [mm]	Tol. [mm]
12.5 x 7.2 x 4.1	12.5	±0.15	7.2	±0.20	4.1	-0.10

Codification code example: 28537- 12.5x7.2x4.1 CTF12-BC

30838



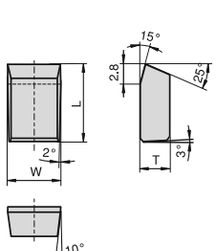

Codification [mm]	L [mm]	Tol. [mm]	W [mm]	Tol. [mm]	T [mm]	Tol. [mm]
8.1 x 7.1 x 4.1	8.1	±0.10	7.1	±0.10	4.1	-0.10

Codification code example: 30838- 8.1x7.1x4.1 CTF12-BC

MD_SB_Solutions-for-stone-working_#SALL_#AQU_#V1.indd 68 13.04.2023 14:46:57

Core drill tips – METRIC

16623



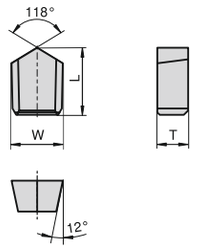

Codification [mm]	L [mm]	Tol. [mm]	W [mm]	Tol. [mm]	T [mm]	Tol. [mm]
8.5 x 6.5 x 3.9	8.5	±0.10	6.25	±0.05	3.915	±0.035

Codification code example: 16623- 8.5x6.5x3.9 CTM17-BC

39241



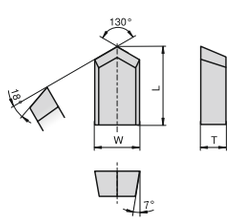

Codification [mm]	L [mm]	Tol. [mm]	W [mm]	Tol. [mm]	T [mm]	Tol. [mm]
8.0 x 4.0 x 3.0	8.0	±0.10	4.0	±0.10	3.0	±0.05
8.0 x 5.5 x 3.6	8.0	±0.10	5.5	±0.10	3.6	±0.05

Codification code example: 39241- 8.0x4.0x3.0 CTM17-BC

42067



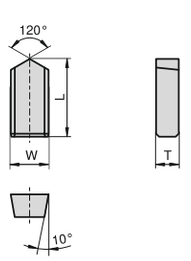

Codification [mm]	L [mm]	Tol. [mm]	W [mm]	Tol. [mm]	T [mm]	Tol. [mm]
10.3 x 5.0 x 3.0	10.3	±0.10	5.0	±0.10	3.0	±0.07

Codification code example: 42067- 10.3x5.0x3.0 CTM17-BC

50809



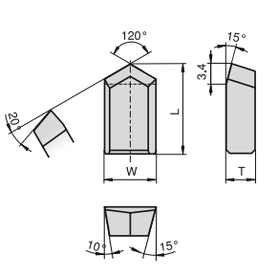

Codification [mm]	L [mm]	Tol. [mm]	W [mm]	Tol. [mm]	T [mm]	Tol. [mm]
8.0 x 7.2 x 4.0	8.0	±0.10	7.2	+0.20	4.1	-0.10
12.5 x 7.2 x 4.0	12.55	±0.15	7.2	+0.20	4.1	-0.10

Codification code example: 50809- 8.0x7.2x4.0 CTM17-BC

MD_SB_Solutions-for-stone-working_#SALL_#AQU_#V1.indd 69 13.04.2023 14:46:57

Hard Material Solutions

Hard cases are our speciality

We are your ideal partner when it comes to **high-quality hard materials for production processes, tool manufacturing and wear protection.**

From standard products to tailor-made solutions, from massive components to minute parts, from the blank to the fully finished product – a product that meets the highest standards of precision, surface treatment, and user-friendly assembly – our carbide solutions ensure improved efficiency and outstanding total cost of ownership.

This is the case in a variety of application fields and industrial sectors. Even when subjected to extreme stress, our cemented carbides are notable for the high flexibility they offer in numerous industries. Our products are specially designed for extreme working conditions, making our Hard Material Solutions impressive tools for optimising your processes and increasing wear resistance.

Product portfolio

- ▲ Blanks and semi-finished products
- ▲ Water-jet cutting
- ▲ Blanks for hobs
- ▲ Drawing tools and drawing nibs

Solutions for:

- ▲ Tool and die industry
- ▲ Fastening industry
- ▲ Injection technology
- ▲ Health industry
- ▲ Plastics industry

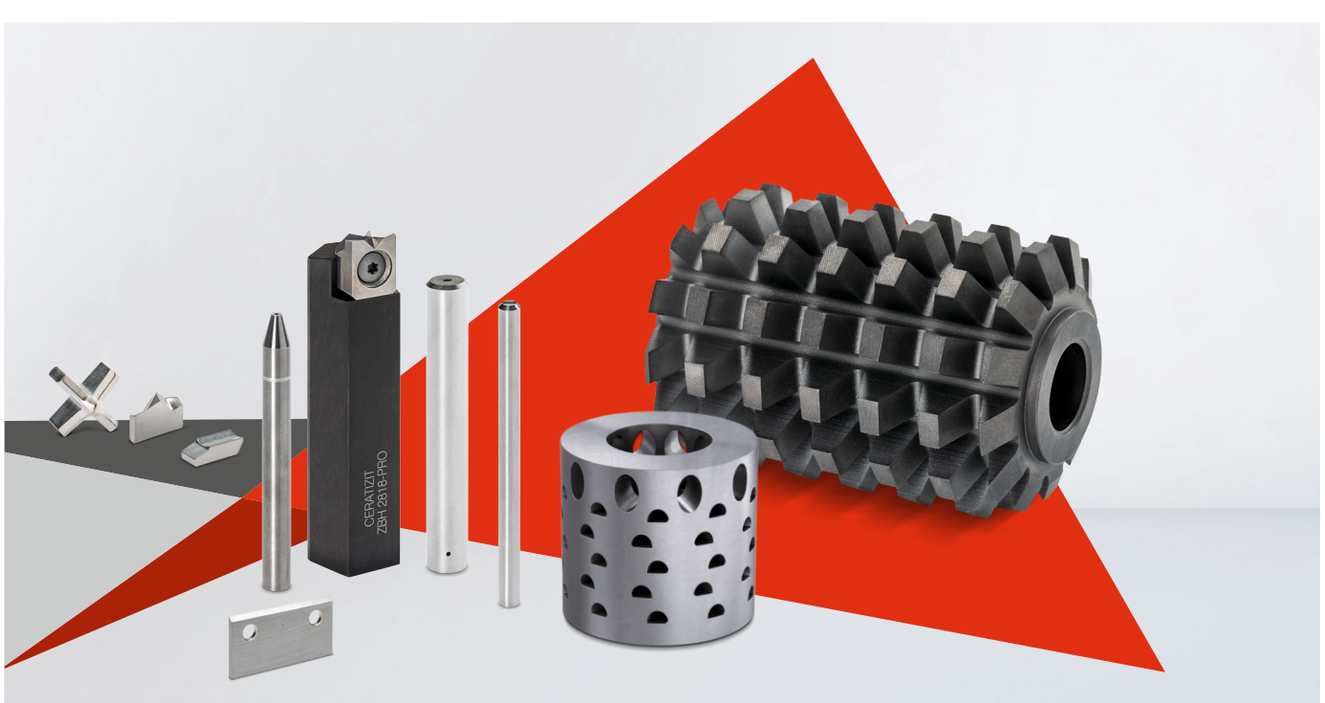

ceratizit.com

Index

1
11384 – Metric 30
11400 – Metric 43
12083 – Metric 67
12500 – Metric 47, 61
12641 – Metric 67
13326 – Metric 67
14157 – Metric 67
14420 – Metric 67
14444 – Metric 34
14818 – Metric 61
16000 – Metric 54
16300 – Metric 50
16623 – Metric 69
17353 – Metric 63
17871 – Ansi 32
17871 – Ansi Inch 31

2
22000 – Ansi 49
22000 – Ansi Inch 48
23500 – Metric 51
23985 – Metric 68
24323 – Metric 52
26000 – Japan 33
28500 – Ansi 55
28500 – Ansi Inch 55
28537 – Metric 68

3
30838 – Metric 68
32222 – Metric 45
37071 – Metric 46
38500 – Metric 34
38911 – Metric 34
39241 – Metric 69
39742 – Metric 35

4
40429 – Metric 35
42067 – Metric 73
43500 – Metric 53
46000 – Metric 26
46600 – Ansi 27
46716 – Metric 56
46973 – Ansi 44
47500 – Japan 28

5
50210 – Metric 57
50809 – Metric 69
50850 – Ansi 29
50850 – Metric 29
58000 – Metric 40
58800 – Metric 42

C
CERATIZIT Style 58000 40
Core drill tips 68–69
CT4 – Ansi 25
CT4 – Japan 25
CT4 – Metric 24
CTF12-BC 15, 22, 38, 66
CTM17-BC 15, 66
CTS06-KC 15

G
Glass drill tips 62–63
Grades for stone working 15, 22, 38, 66

H
Hammer drill tips 20–35

I
Innovation 16–19

M
Masonry drill tips 36–57
Metal cutting tips 60–61

S
Special Tips 58–63

MD_SB_Solutions-for-stone-working_#SALL_#AQU_#V1.indd 71 13.04.2023 14:47:11

Headquarters

CERATIZIT S.A.
LU-8232 Mamer
T. +352 31 20 85-1
ceratizit.com

Sales site

CERATIZIT Hard Material Solutions S.à r.l.
LU-8232 Mamer
T. +352 31 20 85-1
E. hardmaterialsolutions@ceratizit.com

We reserve the right to make technical changes for improvement of the product.

CERATIZIT GROUP

Climate neutral
Print product
ClimatePartner.com/16441-2105-1001

7003834
MA-PRO-0820-EN-04/23

Part of the Plansee Group

MD_SB_Solutions-for-stone-working_#SALL_#AQU_#V1.indd 72 13.04.2023 14:47:13